3.7V Lithium Polymer Battery Data Sheet

Model: 452840

Please Find More:

https://www.fpbattery.com/3-7v-500mah-lithium-polymer-battery/

File Number: A/FP2840-10881

File Version: 01

CONTACT

CUSTOMER SERVICE
86.755.3682.7358
sales@fpbattery.com
Hours of Operation:
9:00am-6:00pm CST, Monday to Friday

LEARN MORE ON:
https://www.fpbattery.com/

DNK POWER COMPANY LIMITED

BATTERY SPECIFICATION

Part Number	DNK 452840
Nominal Voltage	3.7 V
Nominal Capacity	505 mAh
Internal Impedence	<60mΩ
Charge Voltage	4.2V
Recommended Charge Current	0.2 C
Allowed Max Charge Current	0.5 C
Output Voltage Range	4.2 - 2.5 V
Recommended Discharge Current	0.2 C
Max Continuous Discharge Current	1 C
Pulse Discharge Current	3 C (10 mS)
Discharge Cut-off Voltage	2.5± 0.05V
Cycle Life to 80% Health	500 (0.2C, 25°C)

1

ENVIRONMENTAL SPECIFICATIONS

Charging Temperature Range	0 - 45°C
Discharging Temperature Range	-20 - 60°C
Storage Period 1 Week	-20 - 45°C
Storage Period 1 Month	-10 - 45°C
Storage Period 6 Months	0 - 35°C

BATTERY PROTECTION

Over Charge	4.275 ± 50mV
Over Discharge	2.5V ± 50mV
Over Current	3A to 5A
Short Circuit	Yes

MECHANICAL SPECIFICATIONS

Dimensions	42x 28 x 4 mm(L*W*T)
Weight	Around 8 g
Battery Terminals	WC/ FL *

CERTIFICATION

Certification Approval	PLEASE CONSULT SALES

* WC=With Connector FL=Flying Leads UWP=Blue Wrapped PVC BWP=Black Wrapped PVC BC= Bare Cell

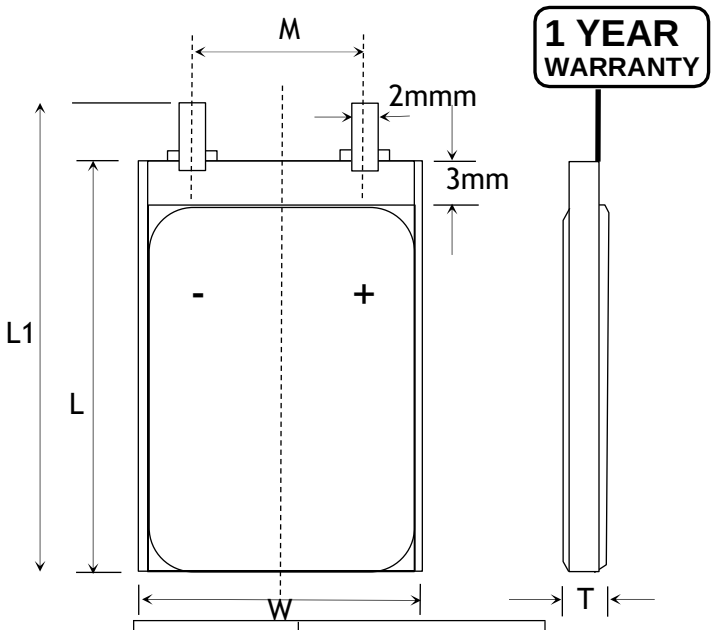

Item	Parameter (mm)
T	4
W	28
M	10
L	40
L_1	42
BL	42 ± 1
CL	100

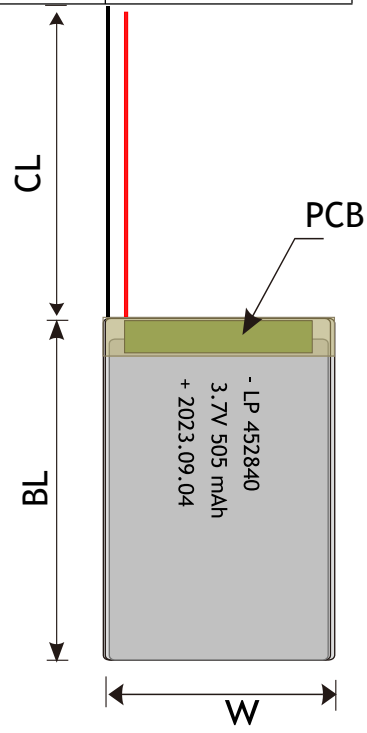

BULK PRODUCTION ACTUAL PICTURES



BARE CELL (BC)



FLYING LEADS (FL)



WITH CONNECTOR (WC)



BLUE WRAPPED PVC (UWP)



BLACK WRAPPED PVC (BWP)

3.7V LIPO BATTERY OPTIONS

Special Ingredients to make batteries work from -40 -85 ° C

Discharging Current up to 100C

Popular JST,Molex,Hirose,Anderson available





LED Power Indicator



Power Button

RELATIVE CURVES

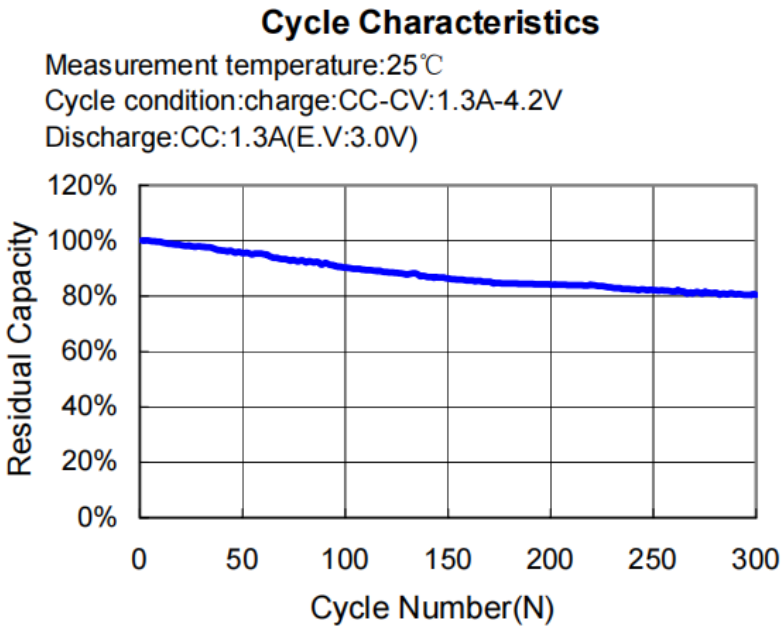

ANNOUNCEMENT

- To prevent over-discharging, the battery shall be charged periodically to maintain between 3.6V and 3.9V. The High-performance charger are equipped with a device to prevent further discharging exceeding a specified cut-off voltage.
- If any of the individual cells become warm/hot compared to the other cells, disconnect it immediately and either cover it with a fire blanket, or put it in a non-conductive container and place it outside away from all flammable objects for at least 30 minutes as chemical reactions can take this long before a fire starts.
- AVOID storing bulk quantities of Li-Ion or LiPo batteries.
- Avoid excessively hot and humid conditions, especially when batteries are fully charged. Do not place batteries in direct sunlight, on hot surfaces or in hot locations.
- Storing LiPo batteries at temperatures higher than 170°F (76°C) for more than 2 hours may result in battery damage or possibly fire.
- Avoid exposing the battery to high humidity for long periods of time.
- ALWAYS activate the building fire alarm system and call 9-1-1 to notify the fire department.
- Batteries should not be carried in pockets as coins, keys and similar metal items can cause shorting leading to overheating, burns or ignition.
- ALWAYS store batteries away from heat sources.
- Do not put batteries in contact with conductive materials, water, seawater, strong oxidizers
- Never leave a battery unattended while charging. Only charge LiPo batteries with chargers specifically designed to charge LiPo batteries. NEVER use a NiMH or NiCd charger. Battery temperatures should not be allowed to fall below 32°F (0°C) or exceed 113°F (45°C) .