3.7V Lithium Polymer Battery Data Sheet

Model: 452456

Please Find More:

https://www.fpbattery.com/3-7v-600mah-lithium-polymer-battery/

File Number: A/FP2456-21331

File Version: 01

CONTACT

CUSTOMER SERVICE
86.755.3682.7358
sales@fpbattery.com
Hours of Operation:
9:00am-6:00pm CST, Monday to Friday

LEARN MORE ON:
https://www.fpbattery.com/

DNK POWER COMPANY LIMITED

BATTERY SPECIFICATION

Part Number	DNK 452456
Nominal Voltage	3.7 V
Nominal Capacity	605 mAh
Internal Impedence	<60mΩ
Charge Voltage	4.2V
Recommended Charge Current	0.2 C
Allowed Max Charge Current	0.5 C
Output Voltage Range	4.2 - 2.5 V
Recommended Discharge Current	0.2 C
Max Continuous Discharge Current	1 C
Pulse Discharge Current	3 C (10 mS)
Discharge Cut-off Voltage	2.5± 0.05V
Cycle Life to 80% Health	500 (0.2C, 25°C)

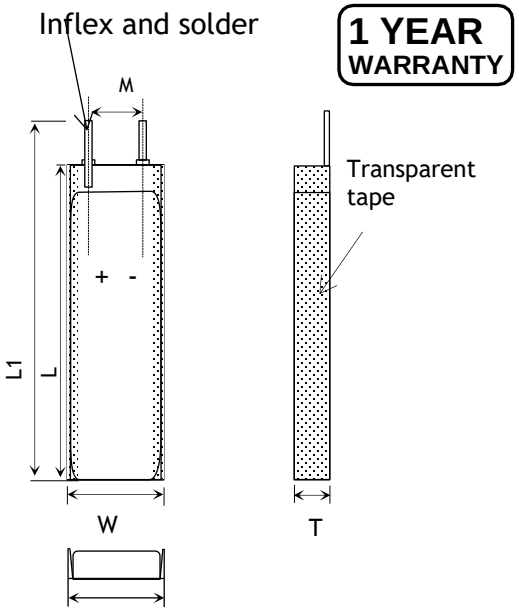

Item	Parameter (mm)
T	4
W	24
M	10
L	56
L_1	58
BL	58 ± 1
CL	100

ENVIRONMENTAL SPECIFICATIONS

Charging Temperature Range	0 - 45°C
Discharging Temperature Range	-20 - 60°C
Storage Period 1 Week	-20 - 45°C
Storage Period 1 Month	-10 - 45°C
Storage Period 6 Months	0 - 35°C

BATTERY PROTECTION

Over Charge	4.275 ± 50mV
Over Discharge	2.5V ± 50mV
Over Current	3A to 5A
Short Circuit	Yes

MECHANICAL SPECIFICATIONS

Dimensions	58x 24 x 4 mm(L*W*T)
Weight	10 g
Battery Terminals	WC/ FL *

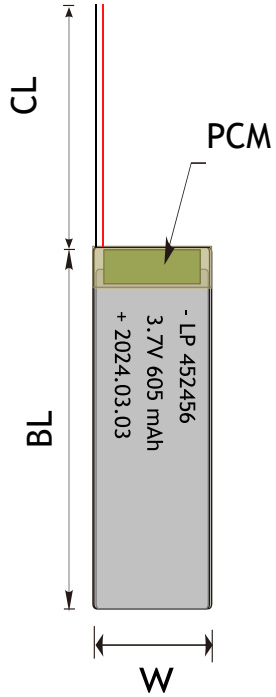

CERTIFICATION

Certification Approval	PLEASE CONSULT SALES

* WC=With Connector FL=Flying Leads UWP=Blue Wrapped PVC BWP=Black Wrapped PVC BC= Bare Cell

BULK PRODUCTION ACTUAL PICTURES



BARE CELL (BC)



FLYING LEADS (FL)



WITH CONNECTOR (WC)



BLUE WRAPPED PVC (UWP)



BLACK WRAPPED PVC (BWP)

3.7V LIPO BATTERY OPTIONS



Special Ingredients to make batteries work from -40 -85 ° C



Discharging Current up to 100C



Popular JST,Molex,Hirose,Anderson available



LED Power Indicator



Power Button



Upgrade to LifePo4 tech and life circle up to 1500

RELATIVE CURVES

SOC Changing Characteriestics Curve in Different Rate @25℃
1C VS 0.2C

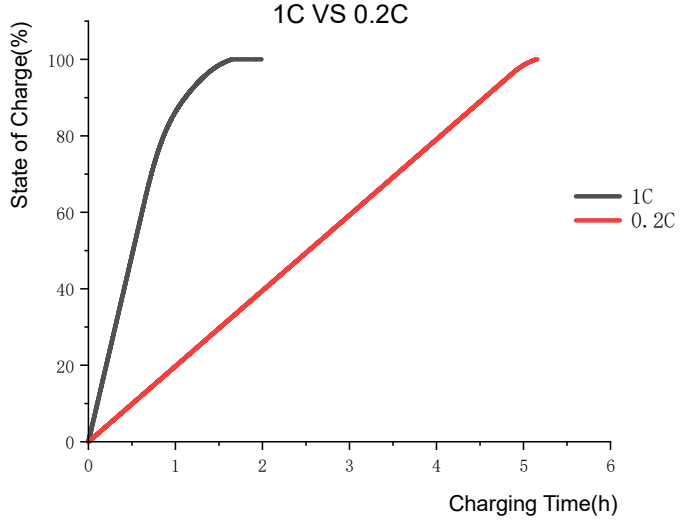

Discharge VS Charge Characteristics Curve@0.2C 25℃

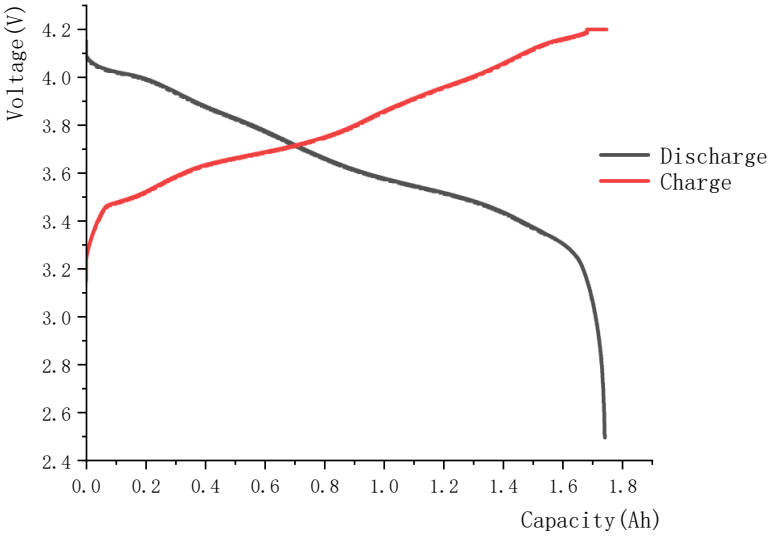

ANNOUNCEMENT

- Lithium-ion batteries assembled to offer higher voltages (over 60V) may present electrical shock and arc hazards. Therefore adherence to applicable electrical protection standards (terminal protection, shielding, PPE etc.) is required tAVOID exposure to electrical hazards.
- Observe the polarities (Negative and Positive). Do not connect them wrongly.
- Always follow the manufacturer's safety instructions
- If a cell is venting or smoking, evacuate, all personnel from the area, closing doors behind you. The area should be secured to ensure that no unnecessary persons enter.
- If the battery becomes hot, smokes, or becomes abnormal, stop using it immediately.
- Charge on a non-flammable surface (concrete, ceramic, steel) away from any flammable material
- Never discharge battery to a level below 3V per cell under load.
- Do not mix different types of batteries or mix new and old ones together (e.g. in a power pack).
- The battery should be transported with 10-50% charged states.
- Inspect batteries weekly. Look for puffed LiPo battery casing. Monitor temperature.
- If your skin or eyes come into contact with liquid from the battery, rinse thoroughly and notify a medical service for expert advice.