3.7V Lithium Polymer Battery Data Sheet

Model: 406179

Please Find More:

https://www.fpbattery.com/3-7v-1800mah-lithium-polymer-battery/

File Number: A/FP6179-8419

File Version: 01

CONTACT

CUSTOMER SERVICE
86.755.3682.7358
sales@fpbattery.com
Hours of Operation:
9:00am-6:00pm CST, Monday to Friday

LEARN MORE ON:
https://www.fpbattery.com/

DNK POWER COMPANY LIMITED

BATTERY SPECIFICATION

Part Number	DNK 406179
Nominal Voltage	3.7 V
Nominal Capacity	1900 mAh
Internal Impedence	<60mΩ
Charge Voltage	4.2V
Recommended Charge Current	0.2 C
Allowed Max Charge Current	0.5 C
Output Voltage Range	4.2 - 2.5 V
Recommended Discharge Current	0.2 C
Max Continuous Discharge Current	1 C
Pulse Discharge Current	3 C (10 mS)
Discharge Cut-off Voltage	2.5± 0.05V
Cycle Life to 80% Health	500 (0.2C, 25°C)

1

ENVIRONMENTAL SPECIFICATIONS

Charging Temperature Range	0 - 45°C
Discharging Temperature Range	-20 - 60°C
Storage Period 1 Week	-20 - 45°C
Storage Period 1 Month	-10 - 45°C
Storage Period 6 Months	0 - 35°C

BATTERY PROTECTION

Over Charge	4.275 ± 50mV
Over Discharge	2.5V ± 50mV
Over Current	3A to 5A
Short Circuit	Yes

MECHANICAL SPECIFICATIONS

Dimensions	81x 61 x 4 mm(L*W*T)
Weight	31 g
Battery Terminals	WC/ FL *

CERTIFICATION

Certification Approval	PLEASE CONSULT SALES

* WC=With Connector FL=Flying Leads UWP=Blue Wrapped PVC BWP=Black Wrapped PVC BC= Bare Cell

Inflex and soler

1 YEAR WARRANTY

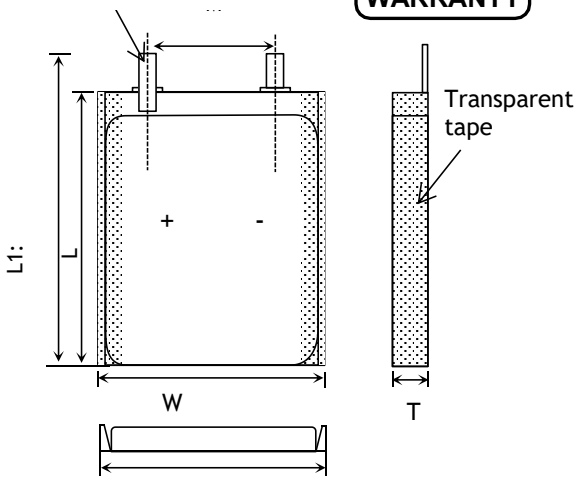

Item	Parameter (mm)
T	4
W	61
M	10
L	79
L_1	81
BL	81 ± 1
CL	100

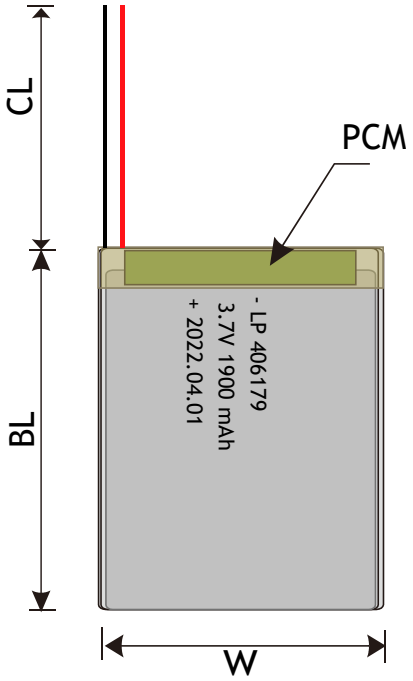

RELATIVE CURVES

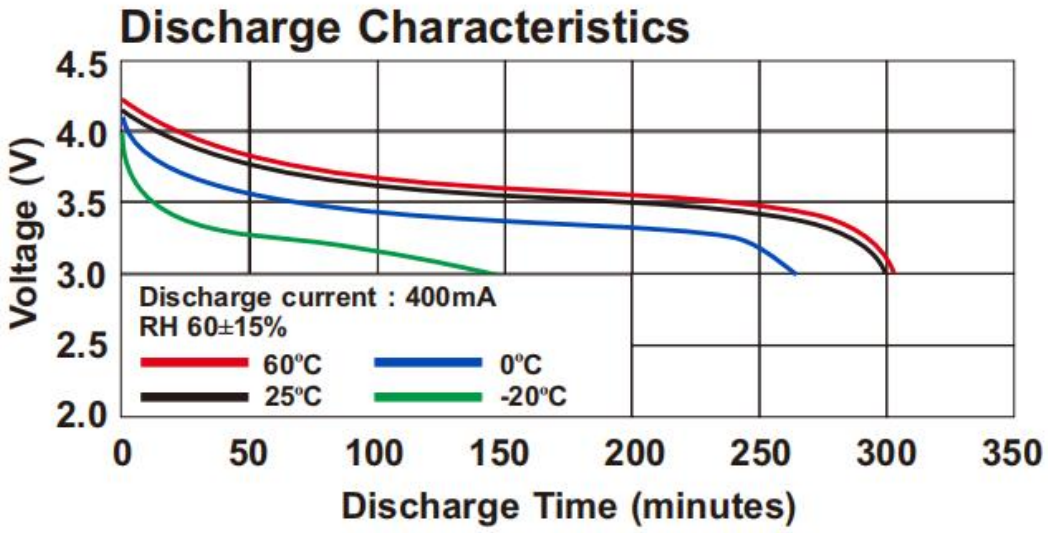

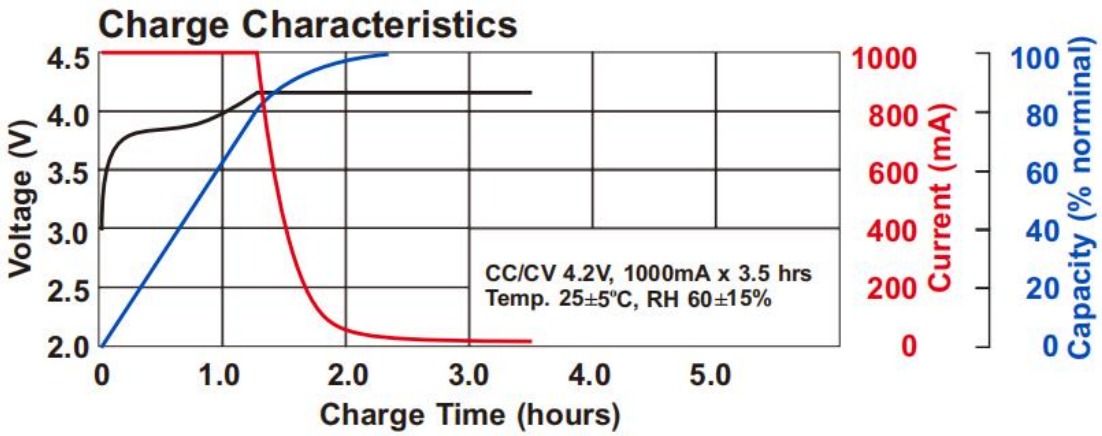

ANNOUNCEMENT

- In general, most LiPo batteries should be charged to no more than 4.2 volts per cell or depleted to less than 3.0 volts per cell. There are new generation batteries available that can handle higher / lower voltages, but they are still new and thus are the exception to the rule.
- NEVER use water to try and extinguish a LiPo fire. Water acts like petrol on a LiPo battery fire.
- Do not use unsuitable battery cover materials.
- Insulate all battery terminals on batteries to be disposed of.
- Do not place the battery near flammable materials.
- Use lithium battery safety bags/containers during charging.
- For best practice store standard lipo batteries at 3.80 volts +/.05 volts per cell. Or at the manufacturer's suggested storage voltage for non standard chemistry's
- Regularly check the condition of the battery. Do not use if damaged or swollen
- ALWAYS close the door to the room or space.
- Obtain recycling container from EHRS for all batteries except LiPo.
- Always inspect batteries for any signs of damage before use, check for physical damage such as cracks/bulges/indentations . Any battery that has been damaged, dented or pierced should be taken out of service immediately, segregated from other batteries and stored as set out below while awaiting safe disposal. Similarly, damaged goods containing batteries should also be segregated from other material and stored safely to await safe disposal.