3.7V Lithium Polymer Battery Data Sheet

Model: 406168

Please Find More:

https://www.fpbattery.com/3-7v-1700mah-lithium-polymer-battery/

File Number: A/FP6168-4495

File Version: 01

CONTACT

CUSTOMER SERVICE
86.755.3682.7358
sales@fpbattery.com
Hours of Operation:
9:00am-6:00pm CST, Monday to Friday

LEARN MORE ON:
https://www.fpbattery.com/

DNK POWER COMPANY LIMITED

BATTERY SPECIFICATION

Part Number	DNK 406168
Nominal Voltage	3.7 V
Nominal Capacity	1700 mAh
Internal Impedence	<60mΩ
Charge Voltage	4.2V
Recommended Charge Current	0.2 C
Allowed Max Charge Current	0.5 C
Output Voltage Range	4.2 - 2.5 V
Recommended Discharge Current	0.2 C
Max Continuous Discharge Current	1 C
Pulse Discharge Current	3 C (10 mS)
Discharge Cut-off Voltage	2.5± 0.05V
Cycle Life to 80% Health	500 (0.2C, 25°C)

1

1 YEAR WARRANTY

Inflex and soler

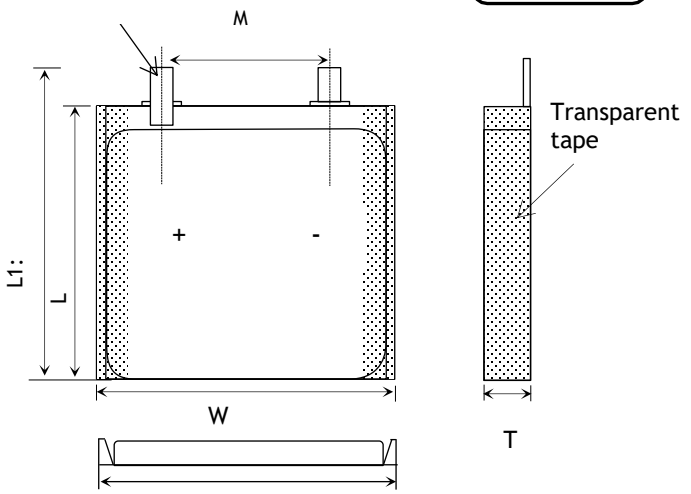

Item	Parameter (mm)
T	4
W	61
M	10
L	68
L_1	70
BL	70 ± 1
CL	100

ENVIRONMENTAL SPECIFICATIONS

Charging Temperature Range	0 - 45°C
Discharging Temperature Range	-20 - 60°C
Storage Period 1 Week	-20 - 45°C
Storage Period 1 Month	-10 - 45°C
Storage Period 6 Months	0 - 35°C

BATTERY PROTECTION

Over Charge	4.275 ± 50mV
Over Discharge	2.5V ± 50mV
Over Current	3A to 5A
Short Circuit	Yes

MECHANICAL SPECIFICATIONS

Dimensions	70x 61 x 4 mm(L*W*T)
Weight	Around 28 g
Battery Terminals	WC/ FL *

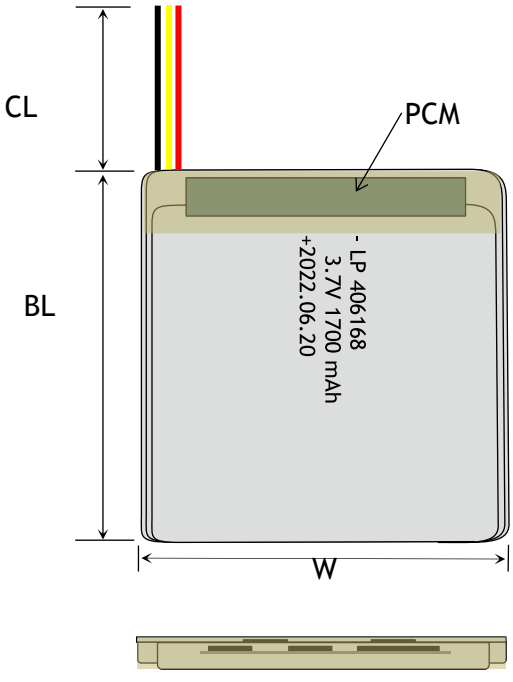

CERTIFICATION

Certification Approval	PLEASE CONSULT SALES

* aWC=With Connector FL=Flying Leads UWP=Blue Wrapped PVC
BWP=Black Wrapped PVC BC= Bare Cell

BULK PRODUCTION ACTUAL PICTURES



BARE CELL (BC)



FLYING LEADS (FL)



WITH CONNECTOR (WC)



BLUE WRAPPED PVC (UWP)



BLACK WRAPPED PVC (BWP)

3.7V LIPO BATTERY OPTIONS



Special Ingredients to make batteries work from -40 -85 ° C



Discharging Current up to 100C



Popular JST,Molex,Hirose,Anderson available



LED Power Indicator



Power Button



Upgrade to LifePo4 tech and life circle up to 1500

RELATIVE CURVES

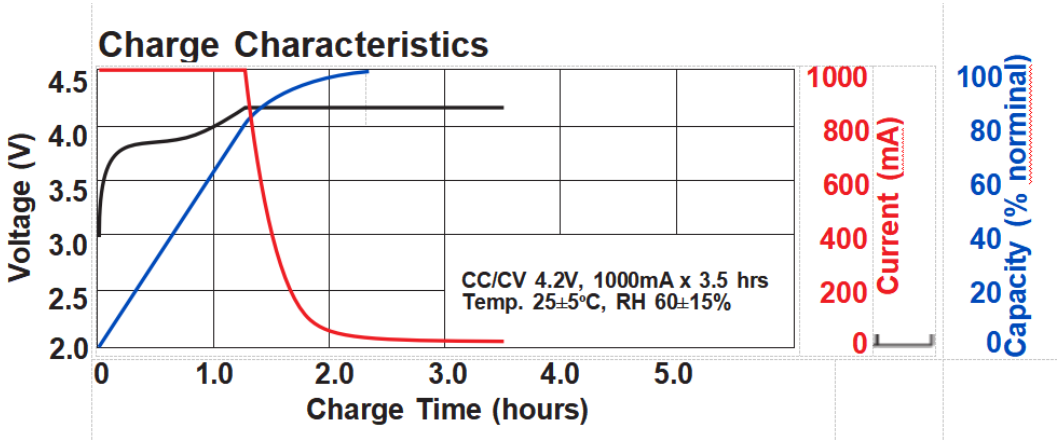

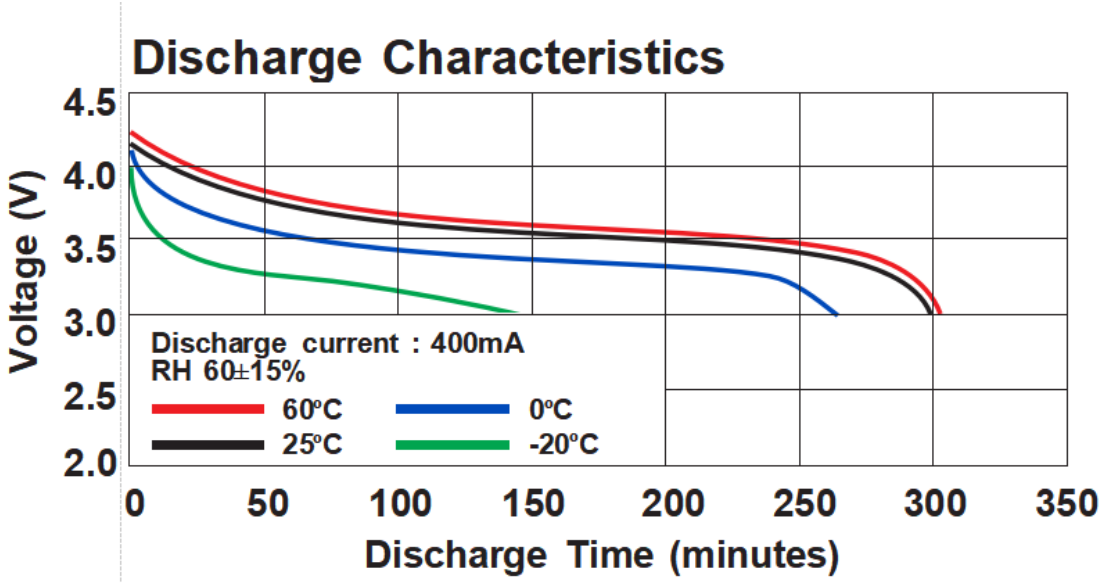

ANNOUNCEMENT

- NEVER attempt to charge a one-time-use (non-rechargeable) Li-Ion or LiPo battery.
- Before recycling your defective battery, it must be neutralized. Take a plastic container, fill it with water and add a lot of salt until the water becomes opaque. Place the LiPo battery in the water and leave for 24 hours. Check with a voltmeter that the voltage is 0.0V.
- Set up dedicated charging area. Area must be free of combustible materials. Maintain space between charging batteries.
- Do not place batteries in closed containers.
- Avoid using batteries that have exceeded their service life.
- Do not allow a Lipo battery to get wet
- ALWAYS store batteries away from any materials that can catch fire.
- Check cell voltage after the first charge to verify that the voltage has not exceeded the maximum charge voltage (Please refer to Chart 1). Check the voltage of each cell via the balance connector to verify that the voltage of each cell has not exceeded the maximum value.
- Charge only with an approved LiPo charger, according to the parameters for the particular battery
- Avoid excessively hot and humid conditions, especially when batteries are fully charged. Do not place batteries in direct sunlight, on hot surfaces or in hot locations.
- Do not charge the battery without supervision.