# 3.7V Lithium Polymer Battery Data Sheet

Model:  405782

Please Find More:

https://www.fpbattery.com/3-7v-1800mah-lithium-polymer-battery/

File Number:  A/FP5782-11045

File Version: 01


CONTACT

CUSTOMER SERVICE
86.755.3682.7358
sales@fpbattery.com
Hours of Operation:
9:00am-6:00pm CST, Monday to Friday

LEARN MORE ON:
https://www.fpbattery.com/

DNK POWER COMPANY LIMITED

## BATTERY SPECIFICATION

| | |
|---|---|
| Part Number | DNK 405782 |
| Nominal Voltage | 3.7 V |
| Nominal Capacity | 1900 mAh |
| Internal Impedence | <60mΩ |
| Charge Voltage | 4.2V |
| Recommended Charge Current | 0.2 C |
| Allowed Max Charge Current | 0.5 C |
| Output Voltage Range | 4.2 - 2.5 V |
| Recommended Discharge Current | 0.2 C |
| Max Continuous Discharge Current | 1 C |
| Pulse Discharge Current | 3 C (10 mS) |
| Discharge Cut-off Voltage | 2.5± 0.05V |
| Cycle Life to 80% Health | 500 (0.2C, 25°C) |

1

## ENVIRONMENTAL SPECIFICATIONS

| | |
|---|---|
| Charging Temperature Range | 0 - 45°C |
| Discharging Temperature Range | -20 - 60°C |
| Storage Period 1 Week | -20 - 45°C |
| Storage Period 1 Month | -10 - 45°C |
| Storage Period 6 Months | 0 - 35°C |

## BATTERY PROTECTION

| | |
|---|---|
| Over Charge | 4.275 ± 50mV |
| Over Discharge | 2.5V ± 50mV |
| Over Current | 3A to 5A |
| Short Circuit | Yes |

## MECHANICAL SPECIFICATIONS

| | |
|---|---|
| Dimensions | 84x 57 x 4 mm(L*W*T) |
| Weight | Around 31 g |
| Battery Terminals | WC/ FL * |

## CERTIFICATION

| | |
|---|---|
| Certification Approval | PLEASE CONSULT SALES |

* WC=With Connector FL=Flying Leads UWP=Blue Wrapped PVC BWP=Black Wrapped PVC BC= Bare Cell

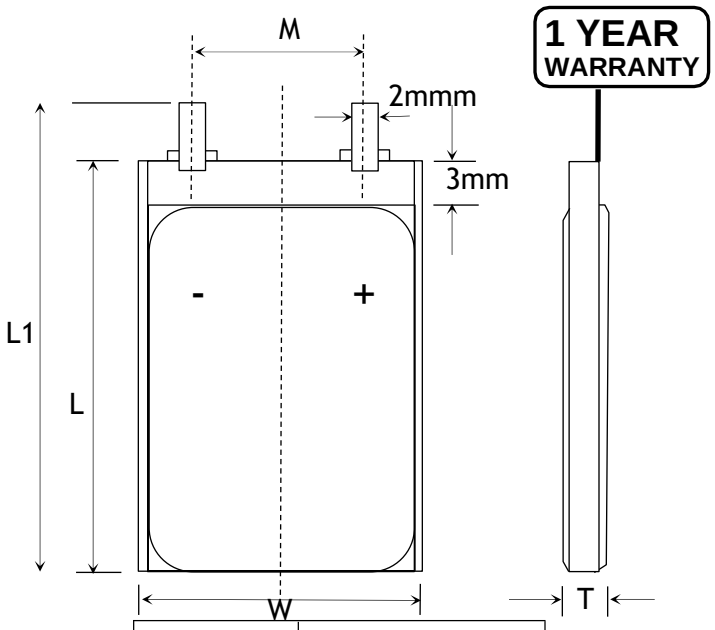


| Item | Parameter (mm) |
|---|---|
| T | 4 |
| W | 57 |
| M | 10 |
| L | 82 |
| $L_1$ | 84 |
| BL | 84 ± 1 |
| CL | 100 |

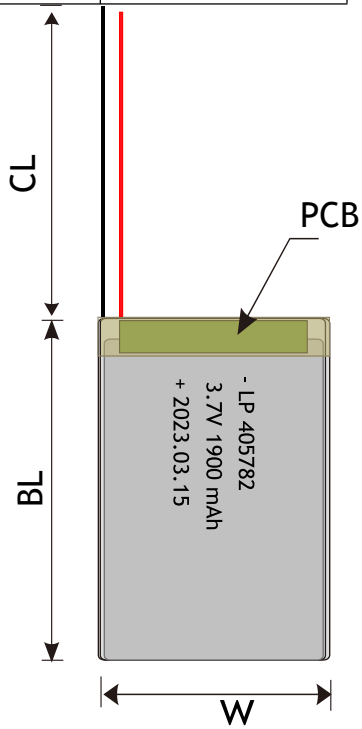

## BULK PRODUCTION ACTUAL PICTURES



BARE CELL (BC)




FLYING LEADS (FL)




WITH CONNECTOR (WC)



BLUE WRAPPED PVC (UWP)



BLACK WRAPPED PVC (BWP)

## 3.7V LIPO BATTERY OPTIONS

Special Ingredients to make batteries work from -40 -85 ° C

Discharging Current up to 100C

Popular JST,Molex,Hirose,Anderson available





LED Power Indicator



Power Button

# RELATIVE CURVES

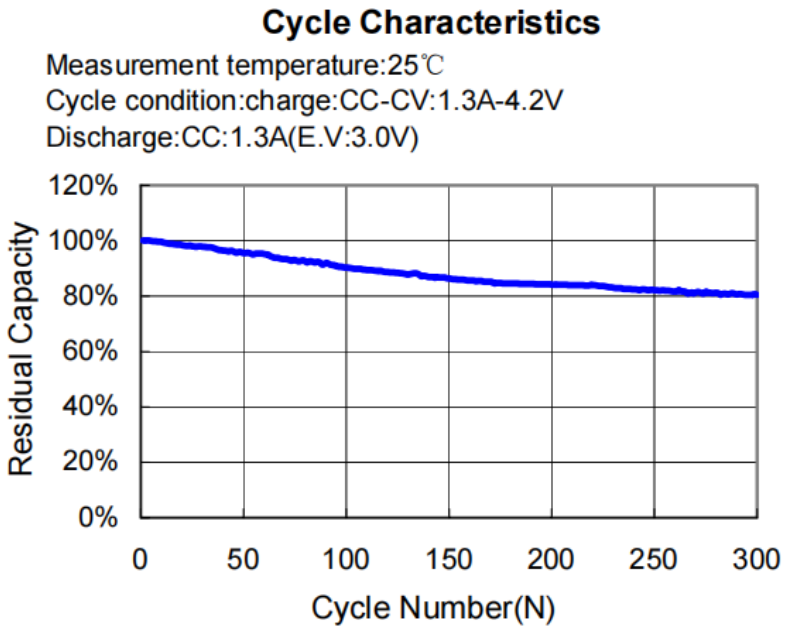


# ANNOUNCEMENT

- Avoid using worn and aged batteries.
- Always inspect batteries for any signs of damage before use, check for physical damage such as cracks/bulges/indentations . Any battery that has been damaged, dented or pierced should be taken out of service immediately, segregated from other batteries and stored as set out below while awaiting safe disposal. Similarly, damaged goods containing batteries should also be segregated from other material and stored safely to await safe disposal.
- Store LiPo batteries to be disposed of in a dedicated area of the battery storage cabinet or a dedicated area of the lab away from combustible materials.
- NEVER charge a device under a pillow, on a bed, on a carpet, on a couch, or other combustible material.
- Always set the charger to proper cell count and/or voltage listed on Batteries' labels.
- Never discharge your Li-Po battery below the Lowest Discharge Voltage. This may cause irreversible damage which will deteriorate battery performance and cycle life. An ESC with an adjustable low voltage cutoff is MANDATORY!
- Avoid using the device for a long time in a hot environment.
- ALWAYS use the correct battery and charger size and type that is specified for the device.
- Set up dedicated charging area. Area must be free of combustible materials. Maintain space between charging batteries.
- Avoid using batteries that have exceeded their service life.
- Store lithium batteries in a dedicated, vented fire-rated cabinet. Keep combustible materials clear of the cabinet. Label cabinet as containing lithium batteries.