3.7V Lithium Polymer Battery Data Sheet

Model: 405472

Please Find More:

https://www.fpbattery.com/3-7v-1600mah-lithium-polymer-battery/

File Number: A/FP5472-9156

File Version: 01

CONTACT

CUSTOMER SERVICE
86.755.3682.7358
sales@fpbattery.com
Hours of Operation:
9:00am-6:00pm CST, Monday to Friday

LEARN MORE ON:
https://www.fpbattery.com/

DNK POWER COMPANY LIMITED

BATTERY SPECIFICATION

Part Number	DNK 405472
Nominal Voltage	3.7 V
Nominal Capacity	1600 mAh
Internal Impedence	<60mΩ
Charge Voltage	4.2V
Recommended Charge Current	0.2 C
Allowed Max Charge Current	0.5 C
Output Voltage Range	4.2 - 2.5 V
Recommended Discharge Current	0.2 C
Max Continuous Discharge Current	1 C
Pulse Discharge Current	3 C (10 mS)
Discharge Cut-off Voltage	2.5± 0.05V
Cycle Life to 80% Health	500 (0.2C, 25°C)

1

ENVIRONMENTAL SPECIFICATIONS

Charging Temperature Range	0 - 45°C
Discharging Temperature Range	-20 - 60°C
Storage Period 1 Week	-20 - 45°C
Storage Period 1 Month	-10 - 45°C
Storage Period 6 Months	0 - 35°C

BATTERY PROTECTION

Over Charge	4.275 ± 50mV
Over Discharge	2.5V ± 50mV
Over Current	3A to 5A
Short Circuit	Yes

MECHANICAL SPECIFICATIONS

Dimensions	74x 54 x 4 mm(L*W*T)
Weight	Around 26 g
Battery Terminals	WC/ FL *

CERTIFICATION

Certification Approval	PLEASE CONSULT SALES

* WC=With Connector FL=Flying Leads UWP=Blue Wrapped PVC BWP=Black Wrapped PVC BC= Bare Cell

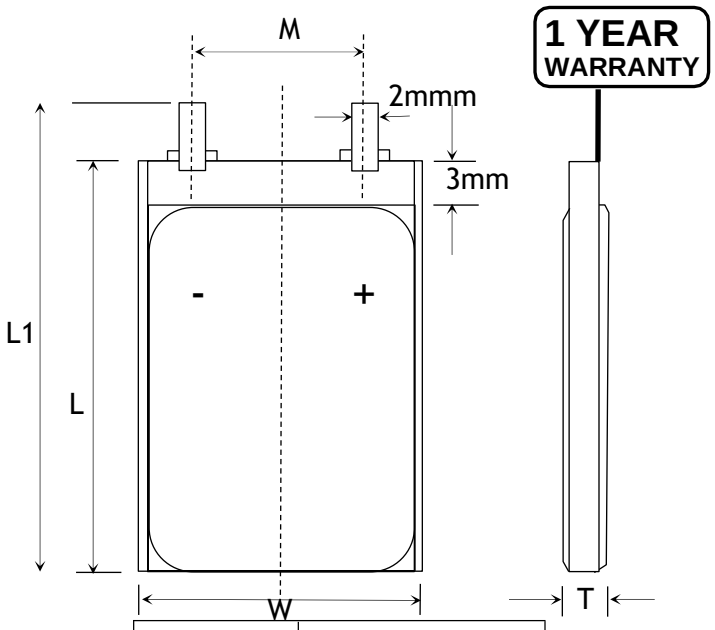

Item	Parameter (mm)
T	4
W	54
M	10
L	72
L_1	74
BL	74 ± 1
CL	100

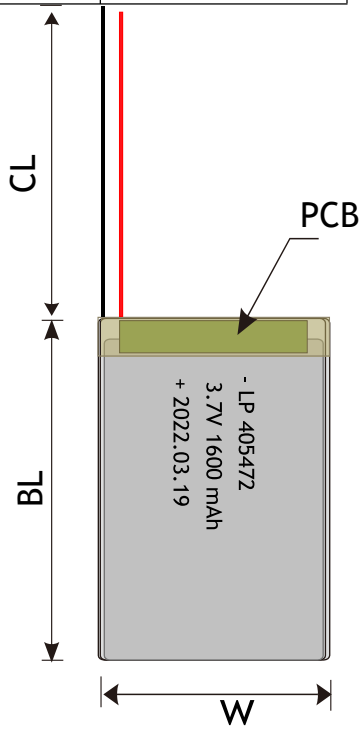

RELATIVE CURVES

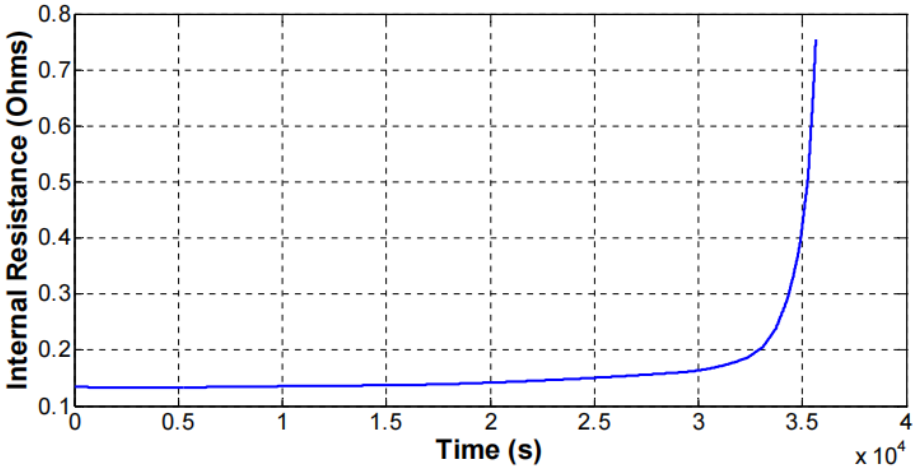

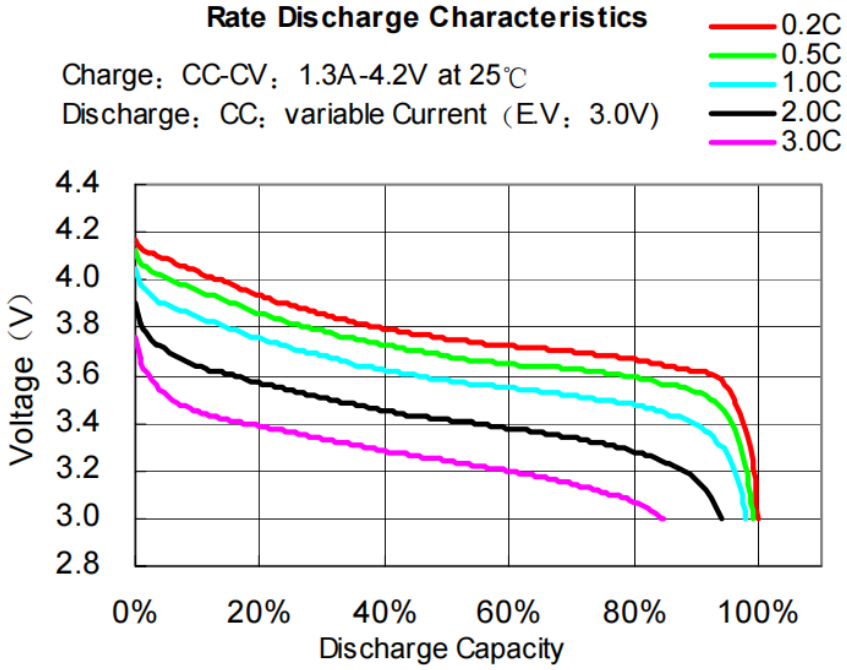

ANNOUNCEMENT

- Never charge Batteries inside of the model.
- Avoid using chargers with long charging times.
- Remove Li-Ion powered devices and batteries from the charger once they are fully charged.
- Do not leave unattended when charging
- ALWAYS locate exits and evacuation routes in your area. Know the location of portable fire extinguishers in the area, and the location of the nearest fire alarm pull station (if the building is equipped with a fire alarm system).
- Do not apply sticky substances to the positive and negative terminals of the battery.
- Do not expose the battery to direct sunlight for extended periods of time.
- ALWAYS immediately disconnect the charging cord from the wall outlet if batteries or equipment develop heat/smoke, unusual odors, or show evidence of bulging (changes in shape or geometry).
- The battery must be installed in the model on a flat surface.
- Always charge the battery in an isolated safe area away from any flammable/combustible materials. Never charge a LiPo battery on a wooden workbench, inside an automobile,or on any flammable surface. Charge LiPo batteries on a concrete surface where there are no flammable objects within 10 feet (3 meters) of the charging area. Always charge your LiPo battery in a fireproof container.
- If at anytime you notice a cell "puff up", disconnect it immediately and cover it with a fire blanket, or put it in a non-conductive container and place

it outside away from all flammable objects for at least 30 minutes as chemical reactions can take this long before a fire starts.