3.7V Lithium Polymer Battery Data Sheet

Model: 405380

Please Find More:

https://www.fpbattery.com/3-7v-1700mah-lithium-polymer-battery/

File Number: A/FP5380-12362

File Version: 01

CONTACT

CUSTOMER SERVICE
86.755.3682.7358
sales@fpbattery.com
Hours of Operation:
9:00am-6:00pm CST, Monday to Friday

LEARN MORE ON:
https://www.fpbattery.com/

DNK POWER COMPANY LIMITED

BATTERY SPECIFICATION

Part Number	DNK 405380
Nominal Voltage	3.7 V
Nominal Capacity	1700 mAh
Internal Impedence	<60mΩ
Charge Voltage	4.2V
Recommended Charge Current	0.2 C
Allowed Max Charge Current	0.5 C
Output Voltage Range	4.2 - 2.5 V
Recommended Discharge Current	0.2 C
Max Continuous Discharge Current	1 C
Pulse Discharge Current	3 C (10 mS)
Discharge Cut-off Voltage	2.5± 0.05V
Cycle Life to 80% Health	500 (0.2C, 25°C)

1

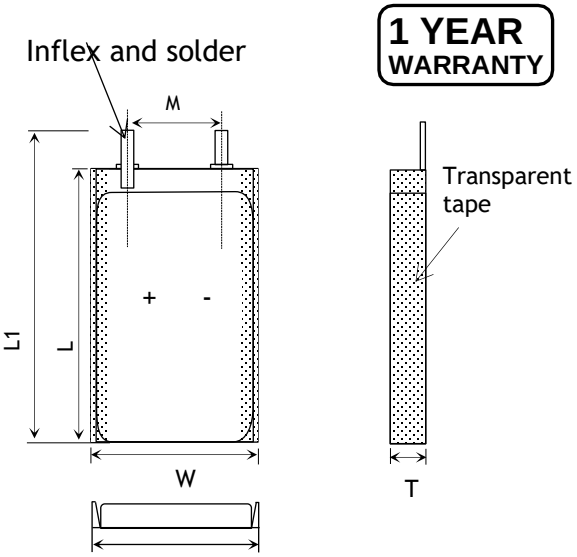

Item	Parameter (mm)
T	4
W	53
M	10
L	80
L_1	82
BL	82 ± 1
CL	100

ENVIRONMENTAL SPECIFICATIONS

Charging Temperature Range	0 - 45°C
Discharging Temperature Range	-20 - 60°C
Storage Period 1 Week	-20 - 45°C
Storage Period 1 Month	-10 - 45°C
Storage Period 6 Months	0 - 35°C

BATTERY PROTECTION

Over Charge	4.275 ± 50mV
Over Discharge	2.5V ± 50mV
Over Current	3A to 5A
Short Circuit	Yes

MECHANICAL SPECIFICATIONS

Dimensions	82x 53 x 4 mm(L*W*T)
Weight	28 g
Battery Terminals	WC/ FL *

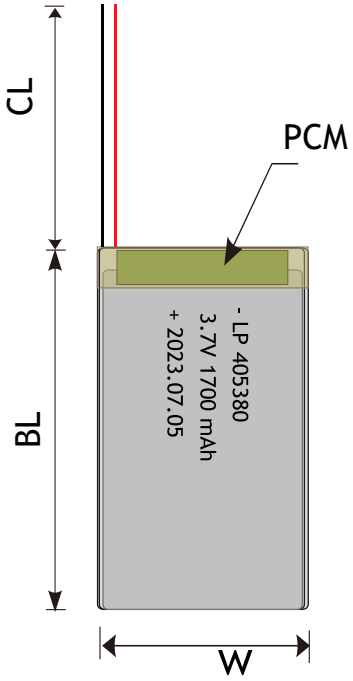

CERTIFICATION

Certification Approval	PLEASE CONSULT SALES

* WC=With Connector FL=Flying Leads UWP=Blue Wrapped PVC BWP=Black Wrapped PVC BC= Bare Cell

RELATIVE CURVES

CHARGE CHARACTERIESTICS

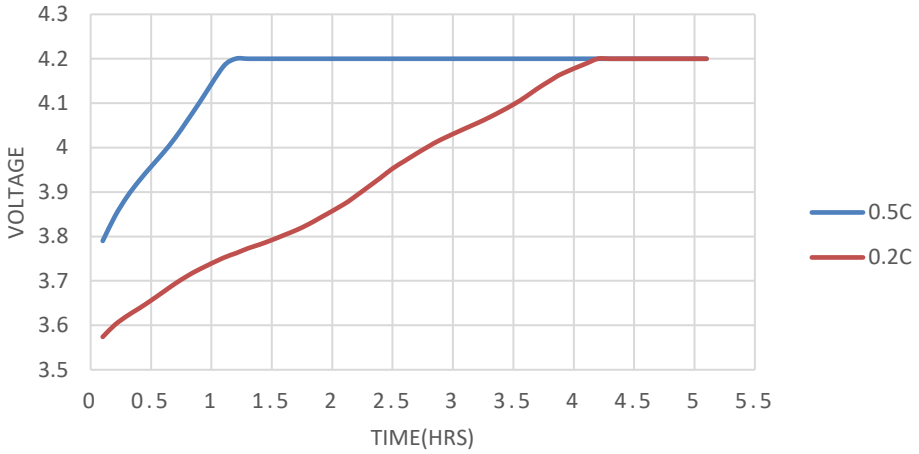

Charge Characteriestics

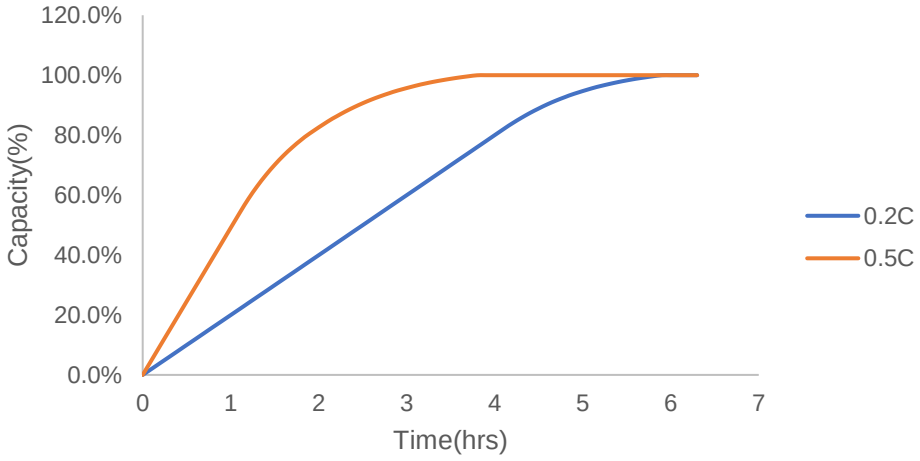

ANNOUNCEMENT

- Do not store together with fire accelerating products
- ALWAYS consider using a “Lipo Guard” or a similar protective pouch while charging LiIon and LiPo batteries (this type of pouch will contain a small fire should the battery bulge or personal laptop computers by individuals.) experience a thermal runaway event, protecting nearby items against ignition. *Note: this recommendation is not intended to apply to routine charging and use of
- Do not charge cells that have been stored in cold conditions (below 10ºC/50ºF), let them warm up (above (10ºC/50ºF), for a minimum of 60 minutes (longer is better).You risk an explosion if you attempt to use cells that have been stored at or below 0ºC (32ºF), Warm them first for at least 60 minutes (longer is better) above 10ºC (50ºF) before charging or discharging.
- Never discharge the battery cells below 3.2V.
- Follow all safe operating guidelines and recommendations provided by the manufacturer.
- Never charge a LiPo battery while inside your model.
- Do not allow charging to continue above 4.20V per cell. This is VERY important as a fire could result.
- Store batteries in a location with low humidity, free from corrosive gas & combustible materials, within the temperature range of 14˚F (-10˚C) and 104˚F (40˚C). For best results, storage between from 41˚F (5˚C) and 77˚F (25˚C) is recommended.
- Do not carry LiPo batteries in your pocket. They have been known to short against coins and keys and cause fires.
- Do not use the unit without its electronic management system.
- Do not puncture the cells as this could cause a fire.