3.7V Lithium Polymer Battery Data Sheet

Model: 405361

Please Find More:

https://www.fpbattery.com/3-7v-1300mah-lithium-polymer-battery/

File Number: A/FP5361-5357

File Version: 01

CONTACT

CUSTOMER SERVICE
86.755.3682.7358
sales@fpbattery.com
Hours of Operation:
9:00am-6:00pm CST, Monday to Friday

LEARN MORE ON:
https://www.fpbattery.com/

DNK POWER COMPANY LIMITED

BATTERY SPECIFICATION

Part Number	DNK 405361
Nominal Voltage	3.7 V
Nominal Capacity	1300 mAh
Internal Impedence	<60mΩ
Charge Voltage	4.2V
Recommended Charge Current	0.2 C
Allowed Max Charge Current	0.5 C
Output Voltage Range	4.2 - 2.5 V
Recommended Discharge Current	0.2 C
Max Continuous Discharge Current	1 C
Pulse Discharge Current	3 C (10 mS)
Discharge Cut-off Voltage	2.5± 0.05V
Cycle Life to 80% Health	500 (0.2C, 25°C)

1

1 YEAR WARRANTY

Inflex and soler

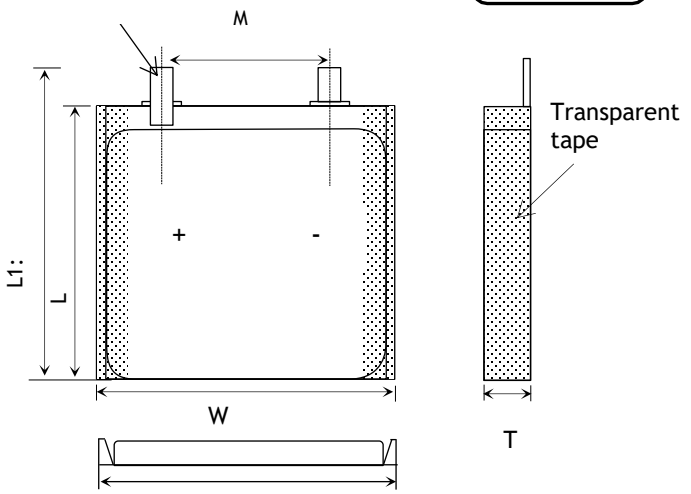

Item	Parameter (mm)
T	4
W	53
M	10
L	61
L_1	63
BL	63 ± 1
CL	100

ENVIRONMENTAL SPECIFICATIONS

Charging Temperature Range	0 - 45°C
Discharging Temperature Range	-20 - 60°C
Storage Period 1 Week	-20 - 45°C
Storage Period 1 Month	-10 - 45°C
Storage Period 6 Months	0 - 35°C

BATTERY PROTECTION

Over Charge	4.275 ± 50mV
Over Discharge	2.5V ± 50mV
Over Current	3A to 5A
Short Circuit	Yes

MECHANICAL SPECIFICATIONS

Dimensions	63x 53 x 4 mm(L*W*T)
Weight	Around 21 g
Battery Terminals	WC/ FL *

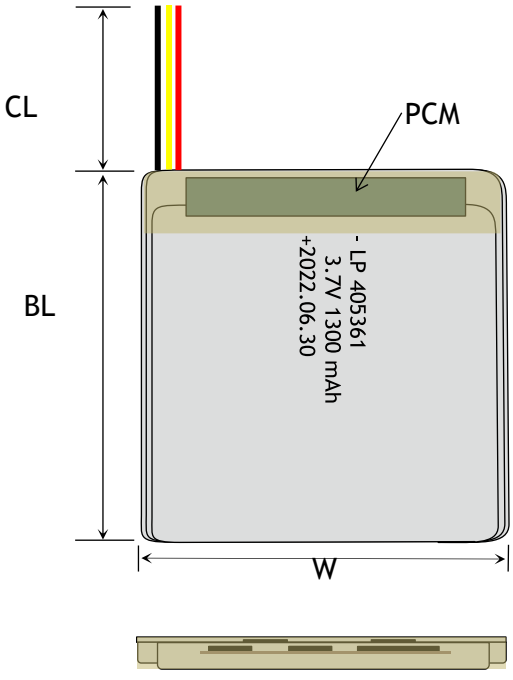

CERTIFICATION

Certification Approval	PLEASE CONSULT SALES

* aWC=With Connector FL=Flying Leads UWP=Blue Wrapped PVC
BWP=Black Wrapped PVC BC= Bare Cell

BULK PRODUCTION ACTUAL PICTURES



BARE CELL (BC)



FLYING LEADS (FL)



WITH CONNECTOR (WC)



BLUE WRAPPED PVC (UWP)



BLACK WRAPPED PVC (BWP)

3.7V LIPO BATTERY OPTIONS



Special Ingredients to make batteries work from -40 -85 ° C



Discharging Current up to 100C



Popular JST,Molex,Hirose,Anderson available



LED Power Indicator



Power Button



Upgrade to LifePo4 tech and life circle up to 1500

RELATIVE CURVES

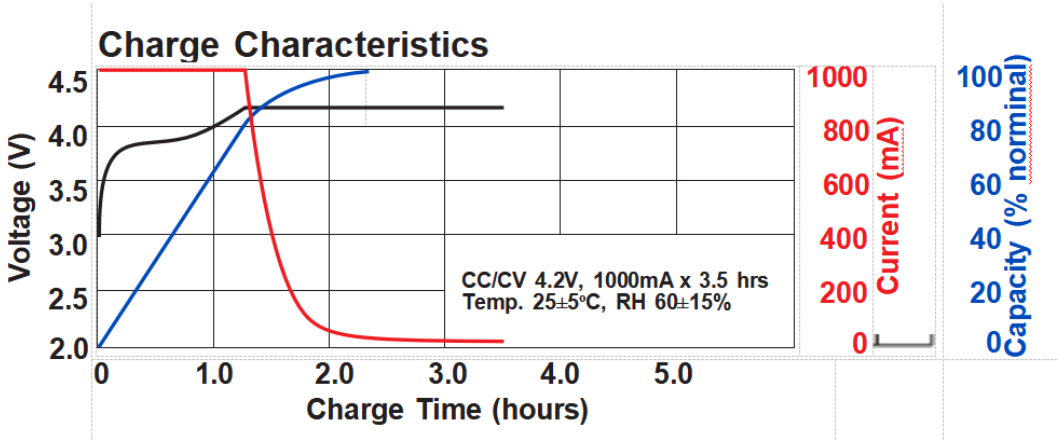

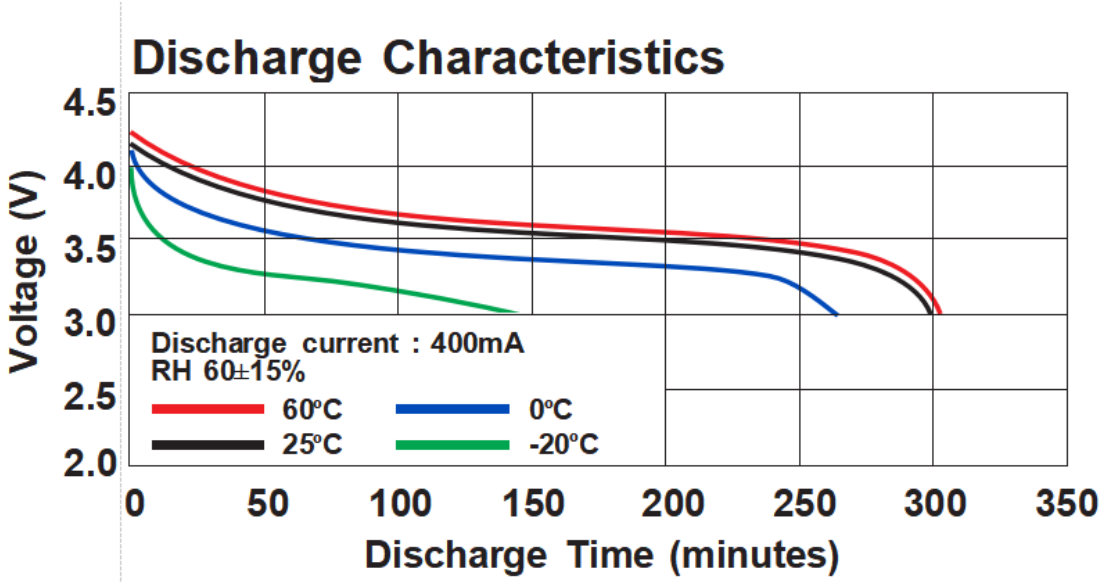

ANNOUNCEMENT

- Always balance charge batteries using the charger's balance charging option. Otherwise, an unbalanced cell may become over charged. This will reduce the life of the battery, and possibly cause a fire which could result in personal injury and property damage.
- In general, most LiPo batteries should be charged to no more than 4.2 volts per cell or depleted to less than 3.0 volts per cell. There are new generation batteries available that can handle higher / lower voltages, but they are still new and thus are the exception to the rule.
- Never charge Batteries inside of the model.
- If the battery develops an abnormal condition, stop using it immediately.
- If you plan not to use your LiPo cells for an extended period (more then 4 days) then use the "Storage" setting on your charger. If your charger does not have this feature then don't use it and invest in one that does.
- Always ensure you are using the correct charger for the specific battery type you are trying to charge. Example: If you are charging a Lipo battery, only use a charger designed for Lipo batteries. If the charger can support different battery types, ensure you select the correct type. Failure to do so may cause a re, which may result in personal injury and property damage.
- The cells shall never be soaked with liquids such as water, seawater drinks such as soft drinks, juices coffee or others.
- Never remove the battery from its protective plastic case.
- LiPo safe bags help contain heat and flames that results if a Li-Ion battery combusts during charging or while in storage.
- Regularly check the condition of the battery. Do not use if damaged or swollen
- Dispose of defective Lipos in accordance with local ordinances and in a safe manner.