3.7V Lithium Polymer Battery Data Sheet

Model: 405182

Please Find More:

https://www.fpbattery.com/3-7v-1700mah-lithium-polymer-battery/

File Number: A/FP5182-14122

File Version: 01

CONTACT

CUSTOMER SERVICE
86.755.3682.7358
sales@fpbattery.com
Hours of Operation:
9:00am-6:00pm CST, Monday to Friday

LEARN MORE ON:
https://www.fpbattery.com/

DNK POWER COMPANY LIMITED

BATTERY SPECIFICATION

Part Number	DNK 405182
Nominal Voltage	3.7 V
Nominal Capacity	1700 mAh
Internal Impedence	<60mΩ
Charge Voltage	4.2V
Recommended Charge Current	0.2 C
Allowed Max Charge Current	0.5 C
Output Voltage Range	4.2 - 2.5 V
Recommended Discharge Current	0.2 C
Max Continuous Discharge Current	1 C
Pulse Discharge Current	3 C (10 mS)
Discharge Cut-off Voltage	2.5± 0.05V
Cycle Life to 80% Health	500 (0.2C, 25°C)

1

1 YEAR WARRANTY

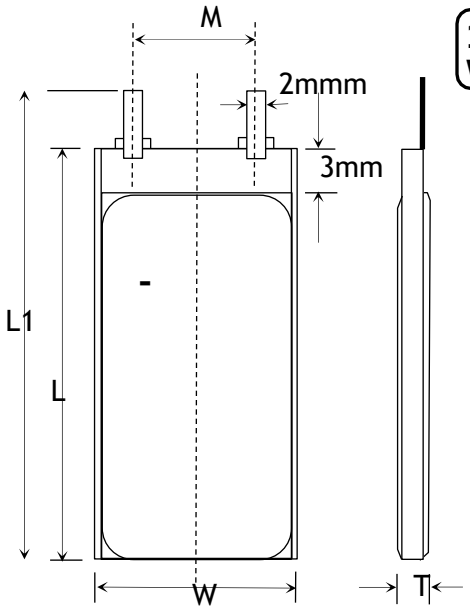

Item	Parameter (mm)
T	4
W	51
M	10
L	82
L_1	84
BL	84 ± 1
CL	100

ENVIRONMENTAL SPECIFICATIONS

Charging Temperature Range	0 - 45°C
Discharging Temperature Range	-20 - 60°C
Storage Period 1 Week	-20 - 45°C
Storage Period 1 Month	-10 - 45°C
Storage Period 6 Months	0 - 35°C

BATTERY PROTECTION

Over Charge	4.275 ± 50mV
Over Discharge	2.5V ± 50mV
Over Current	3A to 5A
Short Circuit	Yes

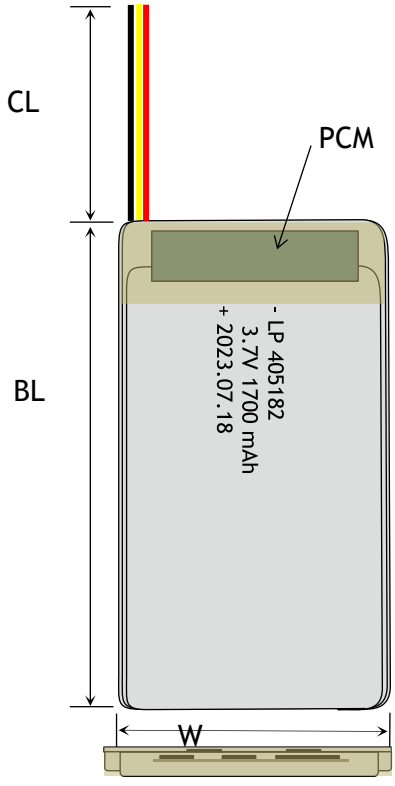

MECHANICAL SPECIFICATIONS

Dimensions	84x 51 x 4 mm(L*W*T)
Weight	Around 28 g
Battery Terminals	WC/ FL *

CERTIFICATION

Certification Approval	PLEASE CONSULT SALES

* WC=With Connector FL=Flying Leads UWP=Blue Wrapped PVC BWP=Black Wrapped PVC BC= Bare Cell

RELATIVE CURVES

0.2C Discharge Characteristics Curve

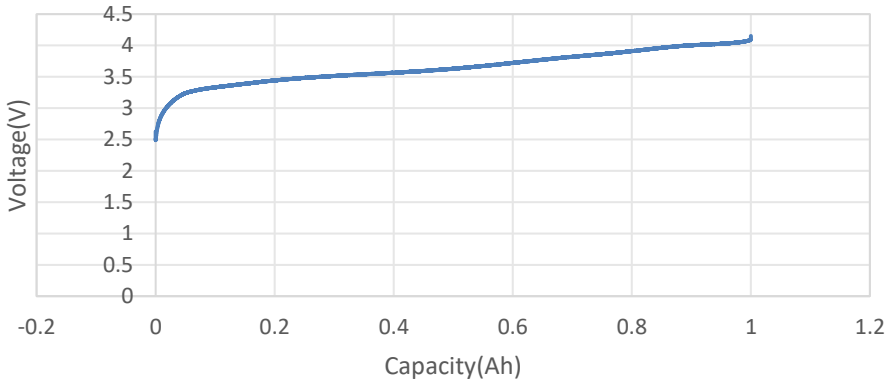

1C Discharge Characteristics Curves

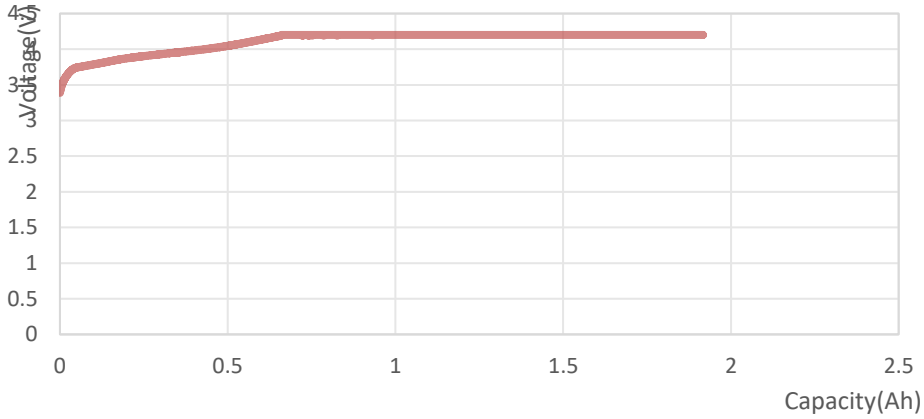

ANNOUNCEMENT

- Avoid frequent shutdowns and restarts of the device on the way to using the battery.
- During transportation and storage, ensure effective measures are employed to prevent shortcircuit.
- Short circuits may cause fire and injury! If you plan to cut the battery's terminal wires, you must cut each wire individually, making sure the wires not to touch each other. Otherwise, a short circuit may occur and potentially cause a fire. If you accidentally cause the battery to short circuit, place it in a safe space and observe it for at least 15 minutes. The battery may swell or possibly catch fire during this time. Additionally, the powerful electric current may cause severe injuries if the battery leads come in contact with rings or jewelry. Dispose of used or damaged LiPo batteries at your local Hazardous Waste Facility or Recycling Center.
- If the battery swells during charging, stop charging immediately and disconnect the battery from the charger. Leave the battery outside for a few hours and observe.
- Avoid crushing or excessive pressure on the battery.
- ALWAYS identify and separate one-time-use batteries from rechargeable batteries.
- Do not use the unit without its electronic management system.
- Always set the charger to proper cell count and/or voltage listed on Batteries' labels.
- Do not discharge you LiPo cells below 3.00V per cell (e.g. 9.00V for a 3S pack) as this will damage the cells and dramatically reduce the life of your cells. If you do accidentally discharge them below 3.00V per cell, leave them for 30 minutes and if the voltage recovers to over 3.30V per cell then they should be OK to use them again. If they do not recover to at least 3.00V per cell then I'm afraid you have damaged them and they should be disposed of (Please see below for the correct method of disposal).
- Have a class ABC or CO2 fire extinguisher nearby the storage area.
- If at anytime you notice a cell "puff up", disconnect it immediately and cover it with a fire blanket, or put it in a non-conductive container and place it outside away from all flammable objects for at least 30 minutes as chemical reactions can take this long before a fire starts.