3.7V Lithium Polymer Battery Data Sheet

Model: 405079

Please Find More:

https://www.fpbattery.com/3-7v-1600mah-lithium-polymer-battery/

File Number: A/FP5079-13596

File Version: 01

CONTACT

CUSTOMER SERVICE
86.755.3682.7358
sales@fpbattery.com
Hours of Operation:
9:00am-6:00pm CST, Monday to Friday

LEARN MORE ON:
https://www.fpbattery.com/

DNK POWER COMPANY LIMITED

BATTERY SPECIFICATION

Part Number	DNK 405079
Nominal Voltage	3.7 V
Nominal Capacity	1600 mAh
Internal Impedence	<60mΩ
Charge Voltage	4.2V
Recommended Charge Current	0.2 C
Allowed Max Charge Current	0.5 C
Output Voltage Range	4.2 - 2.5 V
Recommended Discharge Current	0.2 C
Max Continuous Discharge Current	1 C
Pulse Discharge Current	3 C (10 mS)
Discharge Cut-off Voltage	2.5± 0.05V
Cycle Life to 80% Health	500 (0.2C, 25°C)

1

1 YEAR WARRANTY

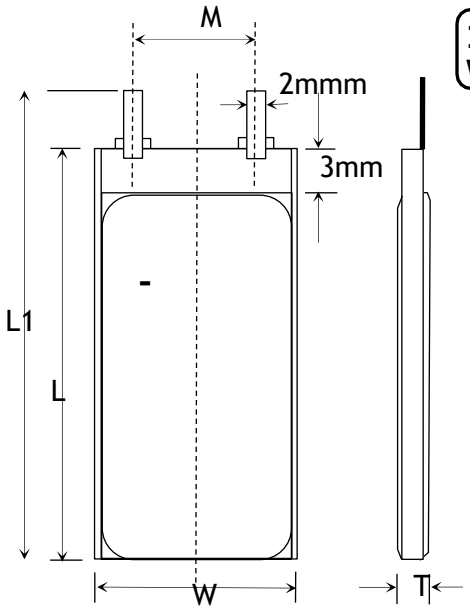

Item	Parameter (mm)
T	4
W	50
M	10
L	79
L_1	81
BL	81 ± 1
CL	100

ENVIRONMENTAL SPECIFICATIONS

Charging Temperature Range	0 - 45°C
Discharging Temperature Range	-20 - 60°C
Storage Period 1 Week	-20 - 45°C
Storage Period 1 Month	-10 - 45°C
Storage Period 6 Months	0 - 35°C

BATTERY PROTECTION

Over Charge	4.275 ± 50mV
Over Discharge	2.5V ± 50mV
Over Current	3A to 5A
Short Circuit	Yes

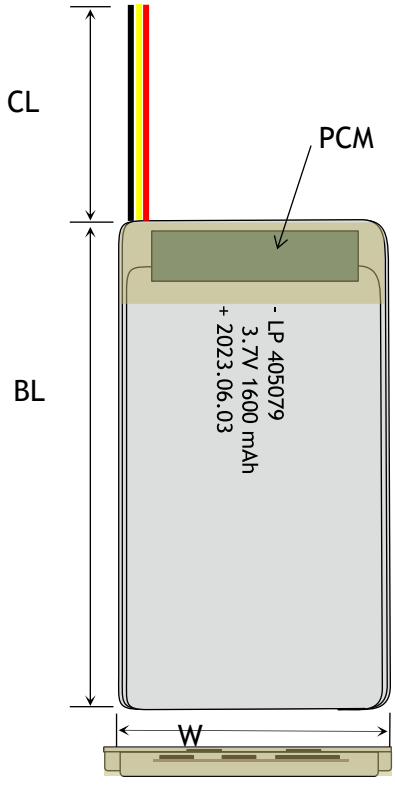

MECHANICAL SPECIFICATIONS

Dimensions	81x 50 x 4 mm(L*W*T)
Weight	Around 26 g
Battery Terminals	WC/ FL *

CERTIFICATION

Certification Approval	PLEASE CONSULT SALES

* WC=With Connector FL=Flying Leads UWP=Blue Wrapped PVC BWP=Black Wrapped PVC BC= Bare Cell

RELATIVE CURVES

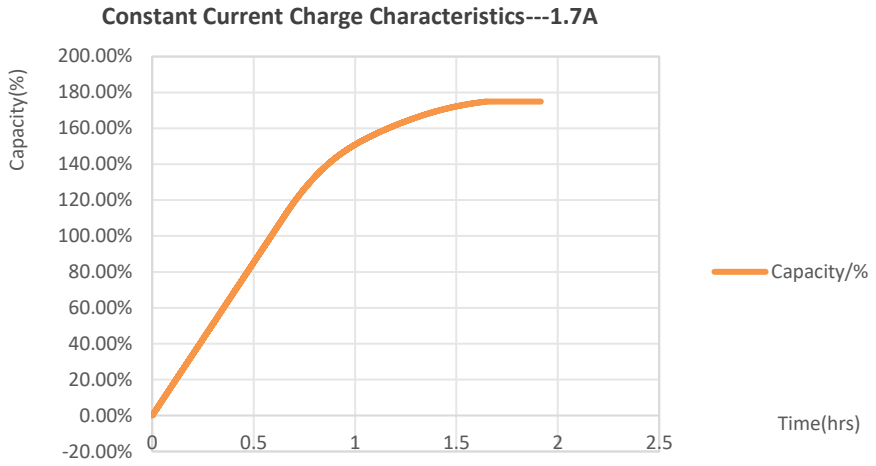

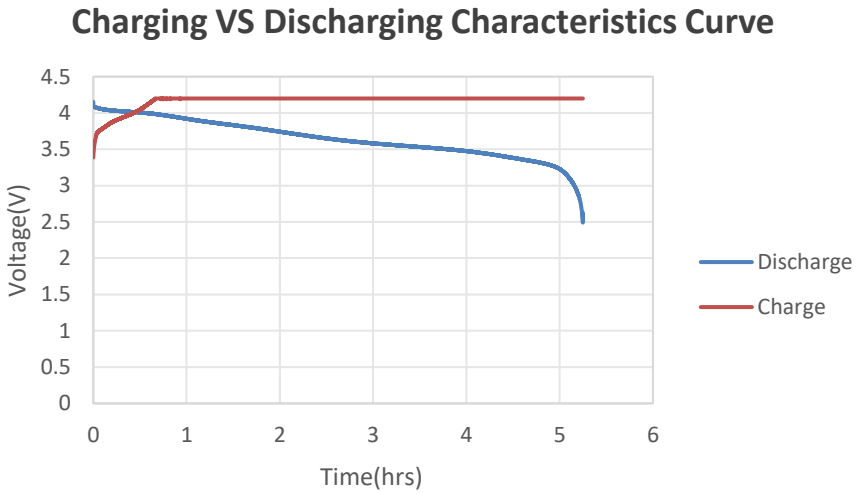

ANNOUNCEMENT

- Only ever use a charger specifically designed to charge Lithium Polymer cells. Failure to do so may a cause fire, which may result in personal injury and/or property damage.
- Do not discharge a LiPo battery at a rate exceeding the maximum continuous discharge current specified for it. Otherwise, the battery will overheat and result in battery deterioration, bursting, ballooning, or possibly cause a fire or explosion.
- NEVER extinguish LiPo batteries with water.
- Do not mix batteries of different models or capacities.
- Avoid using batteries that have exceeded their service life.
- Do not disassemble and damage the battery.
- Do not charge LiPo batteries in the model as you can not successfully monitor and move them quickly if necessary.
- Never allow the temperature of Batteries to exceed 120°F / 49°C during discharge. Adequate cooling for Batteries is required.
- If any of the individual cells become warm/hot compared to the other cells, disconnect it immediately and either cover it with a fire blanket, or put it in a non-conductive container and place it outside away from all flammable objects for at least 30 minutes as chemical reactions can take this long before a fire starts.
- Before starting work, inspect your battery for signs of damage prior to each use: bulging, hissing, leaking, or smoking. Do not use your battery if it displays any of these characteristics.
- Never charge the battery inside a Vehicle.