3.7V Lithium Polymer Battery Data Sheet

Model: 405061

Please Find More:

https://www.fpbattery.com/1200mah-lipo-battery/

File Number: A/FP5061-6852

File Version: 01

CONTACT

CUSTOMER SERVICE
86.755.3682.7358
sales@fpbattery.com
Hours of Operation:
9:00am-6:00pm CST, Monday to Friday

LEARN MORE ON:
https://www.fpbattery.com/

DNK POWER COMPANY LIMITED

BATTERY SPECIFICATION

Part Number	DNK 405061
Nominal Voltage	3.7 V
Nominal Capacity	1200 mAh
Internal Impedence	<60mΩ
Charge Voltage	4.2V
Recommended Charge Current	0.2 C
Allowed Max Charge Current	0.5 C
Output Voltage Range	4.2 - 2.5 V
Recommended Discharge Current	0.2 C
Max Continuous Discharge Current	1 C
Pulse Discharge Current	3 C (10 mS)
Discharge Cut-off Voltage	2.5± 0.05V
Cycle Life to 80% Health	500 (0.2C, 25°C)

1

1 YEAR WARRANTY

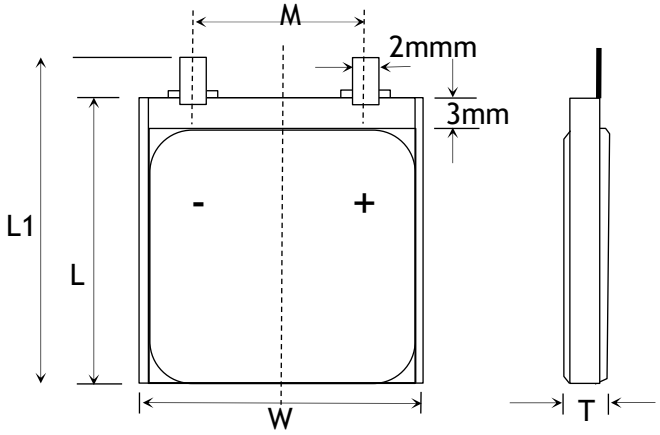

Item	Parameter (mm)
T	4
W	50
M	10
L	61
L_1	63
BL	63 ± 1
CL	100

ENVIRONMENTAL SPECIFICATIONS

Charging Temperature Range	0 - 45°C
Discharging Temperature Range	-20 - 60°C
Storage Period 1 Week	-20 - 45°C
Storage Period 1 Month	-10 - 45°C
Storage Period 6 Months	0 - 35°C

BATTERY PROTECTION

Over Charge	4.275 ± 50mV
Over Discharge	2.5V ± 50mV
Over Current	3A to 5A
Short Circuit	Yes

MECHANICAL SPECIFICATIONS

Dimensions	63x 50 x 4 mm(L*W*T)
Weight	Around 20 g
Battery Terminals	WC/ FL *

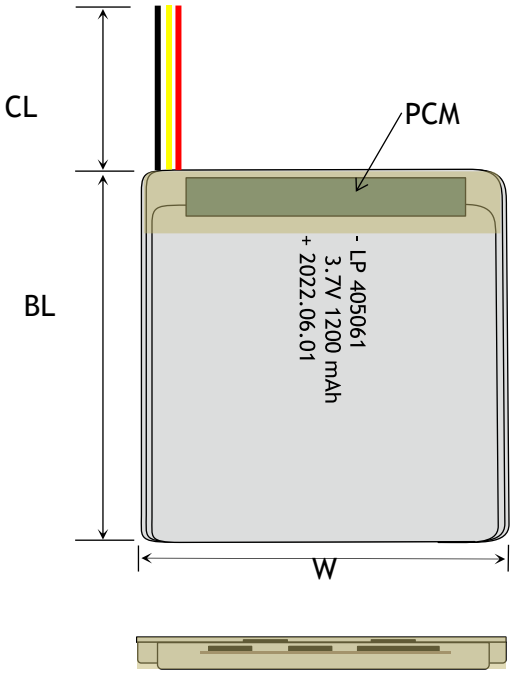

CERTIFICATION

Certification Approval	PLEASE CONSULT SALES

* WC=With Connector FL=Flying Leads UWP=Blue Wrapped PVC
BWP=Black Wrapped PVC BC= Bare Cell

RELATIVE CURVES

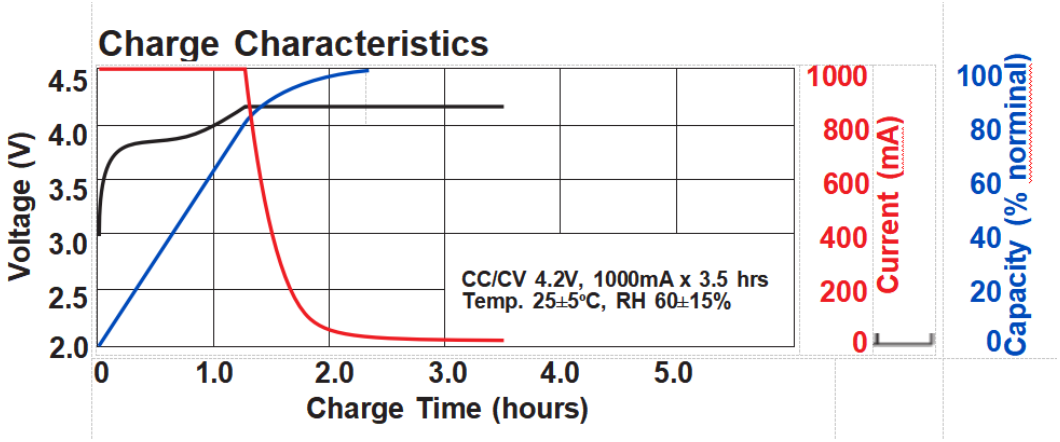

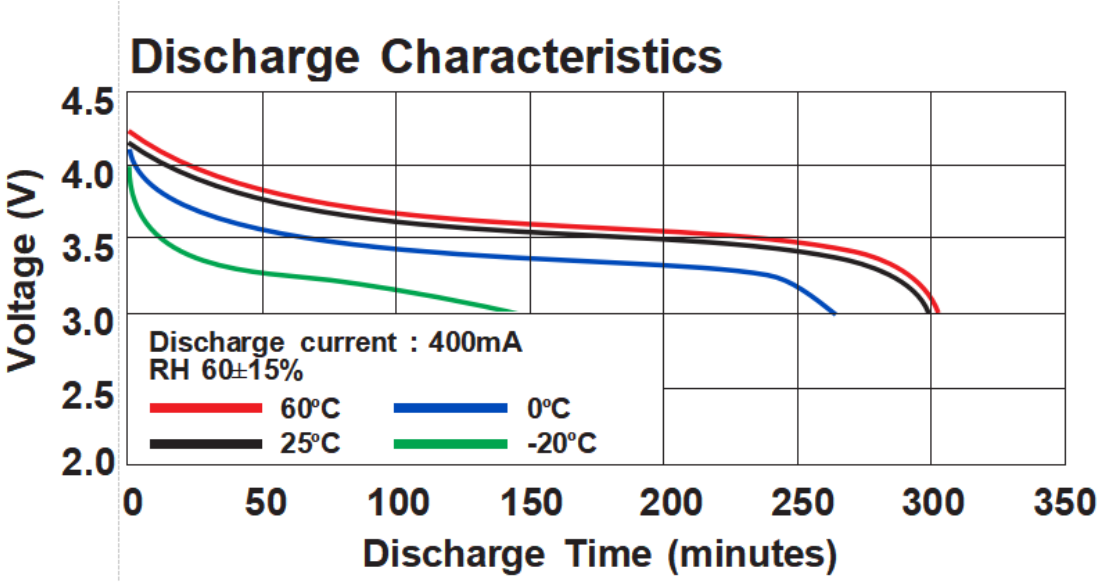

ANNOUNCEMENT

- Discharging capacity can't exceed 80% of the max capacity after full charging to ensure a good cycle performance
- Inspect batteries weekly. Look for puffed LiPo battery casing. Monitor temperature.
- Avoid restarting the device frequently on the way to using the battery.
- Do not place the battery near flammable materials.
- ALWAYS store batteries and devices at room temperature.
- If you notice hot cells, disconnect the charger and remove any external short circuit if present.
- Do not allow the battery to come into common contact with metal to prevent a short circuit.
- Be sure to read all documentation supplied with your battery.
- Charging current should be less than maximum charge current specified in the Product Specification.
- Store LiPo batteries at correct voltage (around 3.8 volts).
- The battery must be protected against shocks and splashing of materials from outside the model.