3.7V Lithium Polymer Battery Data Sheet

Model: 404992

Please Find More:

https://www.fpbattery.com/3-7v-1800mah-lithium-polymer-battery/

File Number: A/FP4992-17843

File Version: 01

CONTACT

CUSTOMER SERVICE
86.755.3682.7358
sales@fpbattery.com
Hours of Operation:
9:00am-6:00pm CST, Monday to Friday

LEARN MORE ON:
https://www.fpbattery.com/

DNK POWER COMPANY LIMITED

BATTERY SPECIFICATION

Part Number	DNK 404992
Nominal Voltage	3.7 V
Nominal Capacity	1800 mAh
Internal Impedence	<60mΩ
Charge Voltage	4.2V
Recommended Charge Current	0.2 C
Allowed Max Charge Current	0.5 C
Output Voltage Range	4.2 - 2.5 V
Recommended Discharge Current	0.2 C
Max Continuous Discharge Current	1 C
Pulse Discharge Current	3 C (10 mS)
Discharge Cut-off Voltage	2.5± 0.05V
Cycle Life to 80% Health	500 (0.2C, 25°C)

1

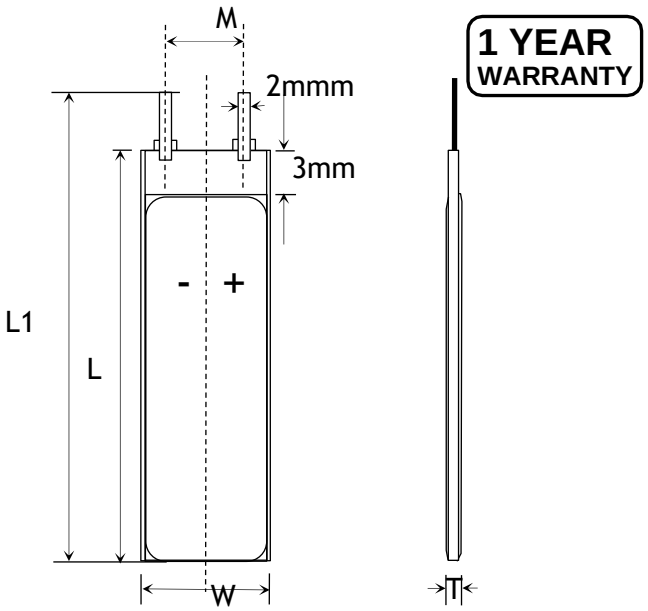

Item	Parameter (mm)
T	4
W	49
M	10
L	92
L_1	94
BL	94 ± 1
CL	100

ENVIRONMENTAL SPECIFICATIONS

Charging Temperature Range	0 - 45°C
Discharging Temperature Range	-20 - 60°C
Storage Period 1 Week	-20 - 45°C
Storage Period 1 Month	-10 - 45°C
Storage Period 6 Months	0 - 35°C

BATTERY PROTECTION

Over Charge	4.275 ± 50mV
Over Discharge	2.5V ± 50mV
Over Current	3A to 5A
Short Circuit	Yes

MECHANICAL SPECIFICATIONS

Dimensions	94x 49 x 4 mm(L*W*T)
Weight	Around 30 g
Battery Terminals	WC/ FL *

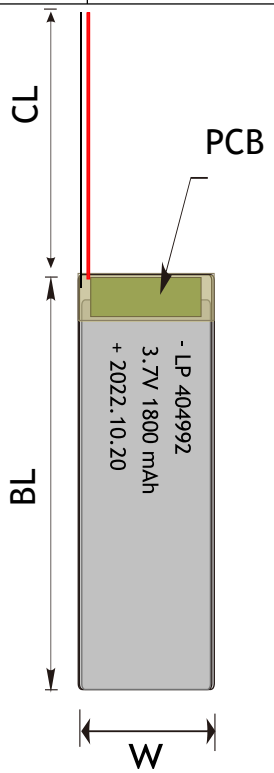

CERTIFICATION

Certification Approval	PLEASE CONSULT SALES

* WC=With Connector FL=Flying Leads UWP=Blue Wrapped PVC
BWP=Black Wrapped PVC BC= Bare Cell

RELATIVE CURVES

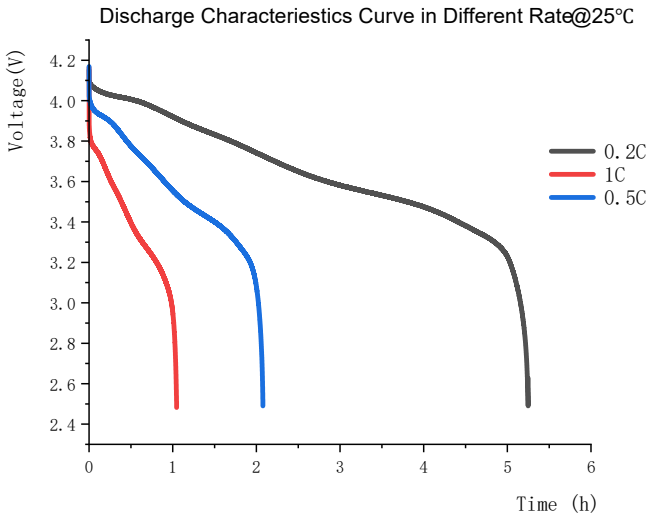

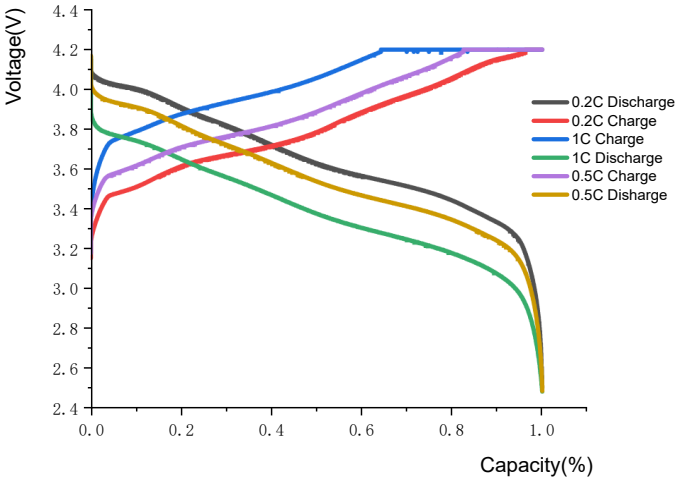

ANNOUNCEMENT

- Insulate all battery terminals on batteries to be disposed of.
- Do not mix different types of batteries or mix new and old ones together (e.g. in a power pack).
- Never charge Batteries inside of the model.
- Always consult the manufacturerGspecific battery manual for proper instructions.
- If any of the individual cells become warm/hot compared to the other cells, disconnect it immediately and either cover it with a fire blanket, or put it in a non-conductive container and place it outside away from all flammable objects for at least 30 minutes as chemical reactions can take this long before a fire starts.
- Always store LiPo pack in a safe and nonGcombustible container away from flammable/combustible materials.
- Avoid restarting the device frequently on the way to using the battery.
- The battery should be transported with 10-50% charged states.
- Only ever use a charger specifically designed to charge Lithium Polymer cells. Failure to do so may a cause fire, which may result in personal injury and/or property damage.
- Never put LiPo batteries or battery packs in pockets, drawers or bags where they might make contact with something made of metal. This can cause a short circuit.
- Do not charge cells that have been stored in cold conditions (below 10ºC/50ºF), let them warm up (above (10ºC/50ºF), for a minimum of 60 minutes (longer is better).You risk an explosion if you attempt to use cells that have been stored at or below 0ºC (32ºF), Warm them first for at least 60 minutes (longer is better) above 10ºC (50ºF) before charging or discharging.