3.7V Lithium Polymer Battery Data Sheet

Model: 404979

Please Find More:

https://www.fpbattery.com/1500mah-lithium-polymer-battery/

File Number: A/FP4979-14204

File Version: 01

CONTACT

CUSTOMER SERVICE
86.755.3682.7358
sales@fpbattery.com
Hours of Operation:
9:00am-6:00pm CST, Monday to Friday

LEARN MORE ON:
https://www.fpbattery.com/

DNK POWER COMPANY LIMITED

BATTERY SPECIFICATION

Part Number	DNK 404979
Nominal Voltage	3.7 V
Nominal Capacity	1500 mAh
Internal Impedence	<60mΩ
Charge Voltage	4.2V
Recommended Charge Current	0.2 C
Allowed Max Charge Current	0.5 C
Output Voltage Range	4.2 - 2.5 V
Recommended Discharge Current	0.2 C
Max Continuous Discharge Current	1 C
Pulse Discharge Current	3 C (10 mS)
Discharge Cut-off Voltage	2.5± 0.05V
Cycle Life to 80% Health	500 (0.2C, 25°C)

1

1 YEAR WARRANTY

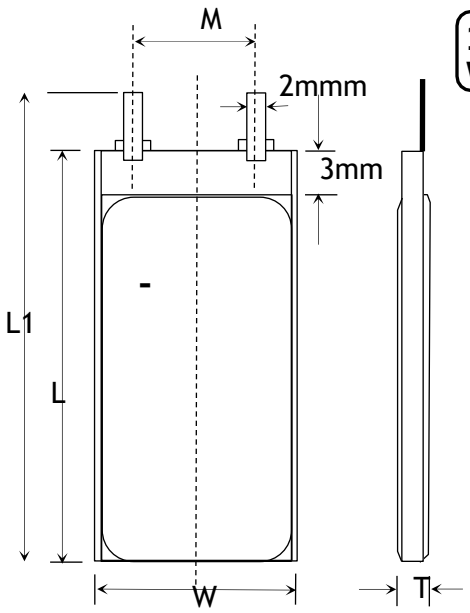

Item	Parameter (mm)
T	4
W	49
M	10
L	79
L_1	81
BL	81 ± 1
CL	100

ENVIRONMENTAL SPECIFICATIONS

Charging Temperature Range	0 - 45°C
Discharging Temperature Range	-20 - 60°C
Storage Period 1 Week	-20 - 45°C
Storage Period 1 Month	-10 - 45°C
Storage Period 6 Months	0 - 35°C

BATTERY PROTECTION

Over Charge	4.275 ± 50mV
Over Discharge	2.5V ± 50mV
Over Current	3A to 5A
Short Circuit	Yes

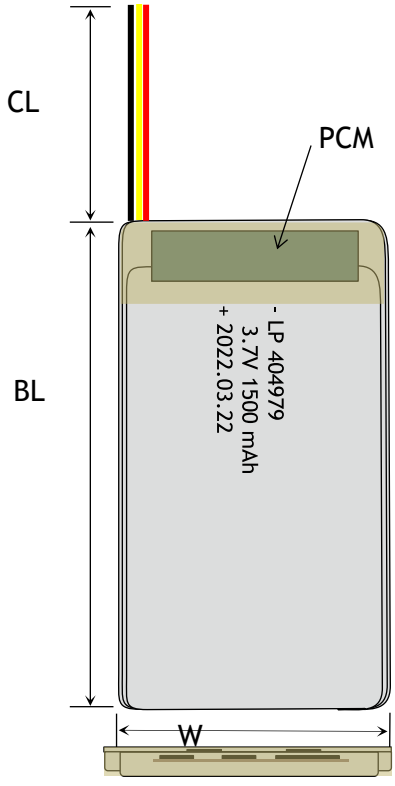

MECHANICAL SPECIFICATIONS

Dimensions	81x 49 x 4 mm(L*W*T)
Weight	Around 25 g
Battery Terminals	WC/ FL *

CERTIFICATION

Certification Approval	PLEASE CONSULT SALES

* WC=With Connector FL=Flying Leads UWP=Blue Wrapped PVC BWP=Black Wrapped PVC BC= Bare Cell

RELATIVE CURVES

0.2C Discharge Characteristics Curve

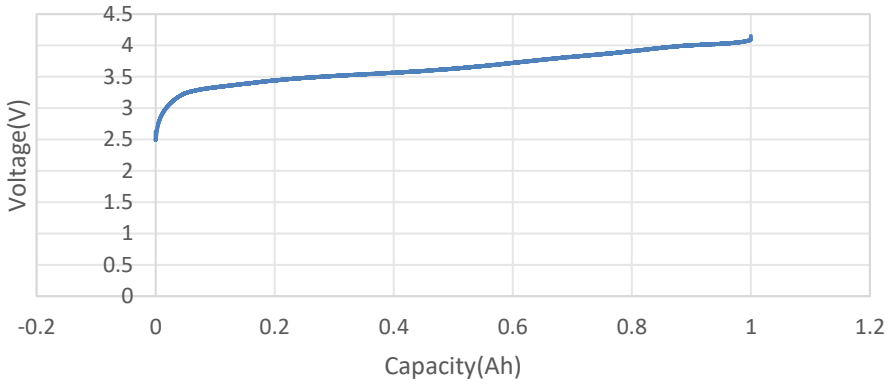

1C Discharge Characteristics Curves

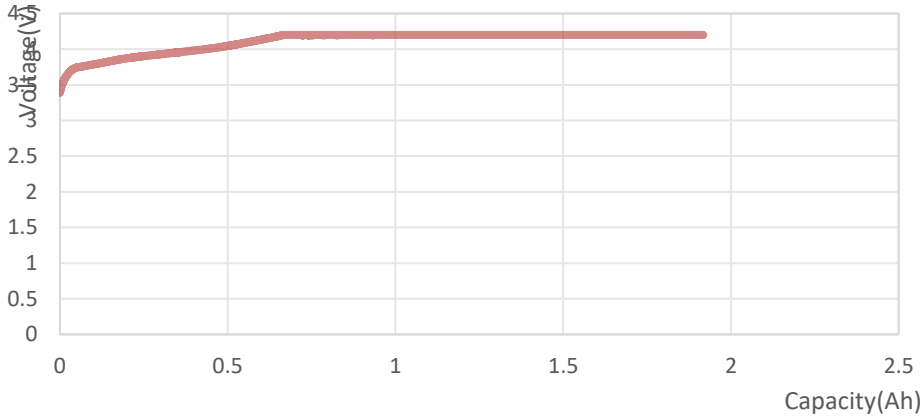

ANNOUNCEMENT

- Never charge a LiPo battery on a wooden or other combustible (carpeted) surface. Always charge LiPo batteries on surfaces made of cement, steel, ceramic or stone.
- ALWAYS consider using a “Lipo Guard” or a similar protective pouch while charging Lilon and LiPo batteries (this type of pouch will contain a small fire should the battery bulge or personal laptop computers by individuals.) experience a thermal runaway event, protecting nearby items against ignition. *Note: this recommendation is not intended to apply to routine charging and use of
- Follow all safe operating guidelines and recommendations provided by the manufacturer.
- Avoid placing the battery near sources of ignition.
- Never leave a charging LiPo battery pack unattended. Never store batteries inside of an automobile.
- Never allow the temperature of Batteries to exceed 120°F / 49°C during discharge. Adequate cooling for Batteries is required.
- Dedicate a battery storage area free of combustible materials.
- Avoid bumping or dropping the battery to prevent damage or internal short circuit.
- Reacting and leaking batteries are considered hazardous waste. Please consult Emergency Procedures below.
- Never charge a battery that shows signs of puffing.
- Store it in a fire-proof container in a cool dry place.