3.7V Lithium Polymer Battery Data Sheet

Model: 404890

Please Find More:

https://www.fpbattery.com/3-7v-1700mah-lithium-polymer-battery/

File Number: A/FP4890-17776

File Version: 01

CONTACT

CUSTOMER SERVICE
86.755.3682.7358
sales@fpbattery.com
Hours of Operation:
9:00am-6:00pm CST, Monday to Friday

LEARN MORE ON:
https://www.fpbattery.com/

DNK POWER COMPANY LIMITED

BATTERY SPECIFICATION

Part Number	DNK 404890
Nominal Voltage	3.7 V
Nominal Capacity	1700 mAh
Internal Impedence	<60mΩ
Charge Voltage	4.2V
Recommended Charge Current	0.2 C
Allowed Max Charge Current	0.5 C
Output Voltage Range	4.2 - 2.5 V
Recommended Discharge Current	0.2 C
Max Continuous Discharge Current	1 C
Pulse Discharge Current	3 C (10 mS)
Discharge Cut-off Voltage	2.5± 0.05V
Cycle Life to 80% Health	500 (0.2C, 25°C)

1

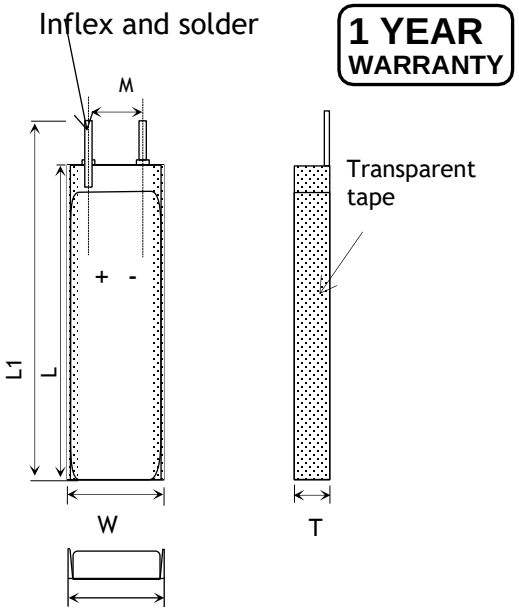

Item	Parameter (mm)
T	4
W	48
M	10
L	90
L_1	92
BL	92 ± 1
CL	100

ENVIRONMENTAL SPECIFICATIONS

Charging Temperature Range	0 - 45°C
Discharging Temperature Range	-20 - 60°C
Storage Period 1 Week	-20 - 45°C
Storage Period 1 Month	-10 - 45°C
Storage Period 6 Months	0 - 35°C

BATTERY PROTECTION

Over Charge	4.275 ± 50mV
Over Discharge	2.5V ± 50mV
Over Current	3A to 5A
Short Circuit	Yes

MECHANICAL SPECIFICATIONS

Dimensions	92x 48 x 4 mm(L*W*T)
Weight	28 g
Battery Terminals	WC/ FL *

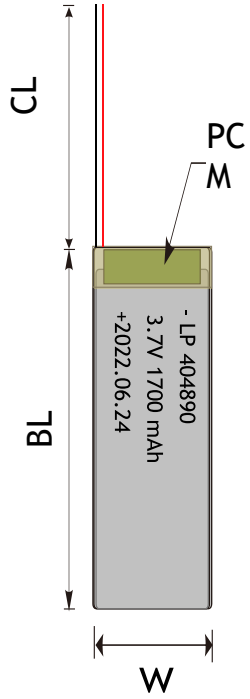

CERTIFICATION

Certification Approval	PLEASE CONSULT SALES

* WC=With Connector FL=Flying Leads UWP=Blue Wrapped PVC BWP=Black Wrapped PVC BC= Bare Cell

RELATIVE CURVES

Discharge Characteriestics Curve in Different Rate@25℃

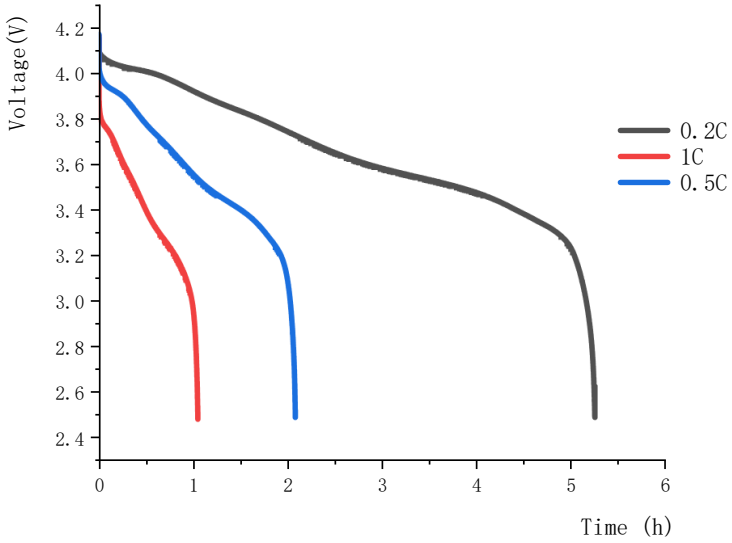

Charge & Discharge Characteriestics in different Rate@25℃

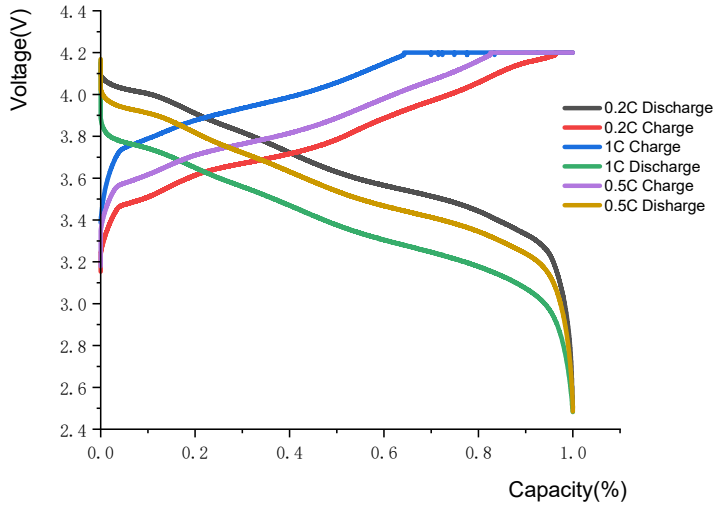

ANNOUNCEMENT

- Avoid storing unused batteries for long periods of time, and perform regular battery maintenance and charging.
- NEVER charge batteries at temperatures below 32°F (0°C) or above 105°F (40°C).
- Stop using or charging the battery immediately if the battery becomes or appears damaged, gives off an odor, becomes discolored or deformed, starts to balloon or swell, leaks, exceeds a temperature of 160°F (71°C), or if any other abnormality is detected. Disconnect the battery and observe it in a safe area outside of any building or vehicle and away from any combustible materials. These abnormalities may cause the battery to leak, and the reaction with air may cause the chemical materials inside to ignite. Because delayed chemical reactions may occur (a battery can still ignite even after 10 minutes), you should continue observing the battery for at least 15 minutes as a safety precaution.
- Do not inhale the gasses of a damaged battery or ingest the contents. If you do accidentally swallow the contents of LiPo cells seek medical attention immediately.
- Regularly check the condition of the battery. Do not use if damaged or swollen
- Do not charge hot cells after use. Warm cells are OK. Always let hot cells cool before charging.
- Do not puncture the cells as this could cause a fire.
- ALWAYS close the door to the room or space.
- ALWAYS evacuate the building to your unit’s designated outside meeting location.
- Discharging capacity can't exceed 80% of the max capacity after full charging to ensure a good cycle performance
- Never charge a lithium polymer battery pack that has been punctured or damaged in a crash.