3.7V Lithium Polymer Battery Data Sheet

Model: 404871

Please Find More:

https://www.fpbattery.com/3-7v-1400mah-lithium-polymer-battery/

File Number: A/FP4871-11803

File Version: 01

CONTACT

CUSTOMER SERVICE
86.755.3682.7358
sales@fpbattery.com
Hours of Operation:
9:00am-6:00pm CST, Monday to Friday

LEARN MORE ON:
https://www.fpbattery.com/

DNK POWER COMPANY LIMITED

BATTERY SPECIFICATION

Part Number	DNK 404871
Nominal Voltage	3.7 V
Nominal Capacity	1400 mAh
Internal Impedence	<60mΩ
Charge Voltage	4.2V
Recommended Charge Current	0.2 C
Allowed Max Charge Current	0.5 C
Output Voltage Range	4.2 - 2.5 V
Recommended Discharge Current	0.2 C
Max Continuous Discharge Current	1 C
Pulse Discharge Current	3 C (10 mS)
Discharge Cut-off Voltage	2.5± 0.05V
Cycle Life to 80% Health	500 (0.2C, 25°C)

1

1 YEAR WARRANTY

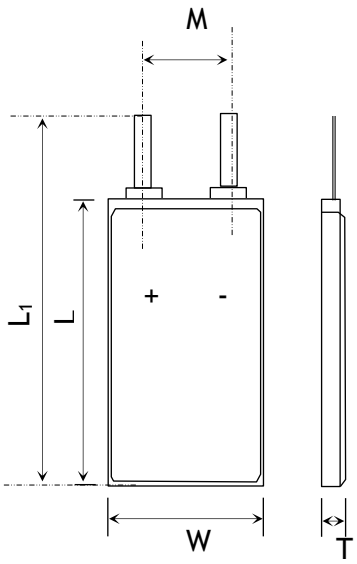

Item	Parameter (mm)
T	4
W	48
M	10
L	71
L_1	73
BL	73 ± 1
CL	100

ENVIRONMENTAL SPECIFICATIONS

Charging Temperature Range	0 - 45°C
Discharging Temperature Range	-20 - 60°C
Storage Period 1 Week	-20 - 45°C
Storage Period 1 Month	-10 - 45°C
Storage Period 6 Months	0 - 35°C

BATTERY PROTECTION

Over Charge	4.275 ± 50mV
Over Discharge	2.5V ± 50mV
Over Current	3A to 5A
Short Circuit	Yes

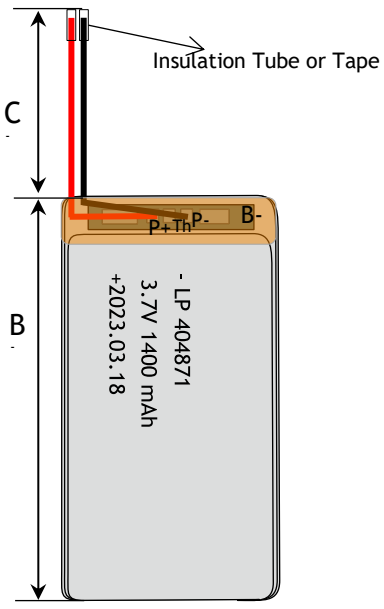

MECHANICAL SPECIFICATIONS

Dimensions	73x 48 x 4 mm(L*W*T)
Weight	Around 23 g
Battery Terminals	WC/ FL *

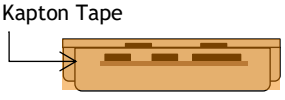

CERTIFICATION

Certification Approval	PLEASE CONSULT SALES

* WC=With Connector FL=Flying Leads UWP=Blue Wrapped PVC BWP=Black Wrapped PVC BC= Bare Cell

RELATIVE CURVES

Charge Characteristics

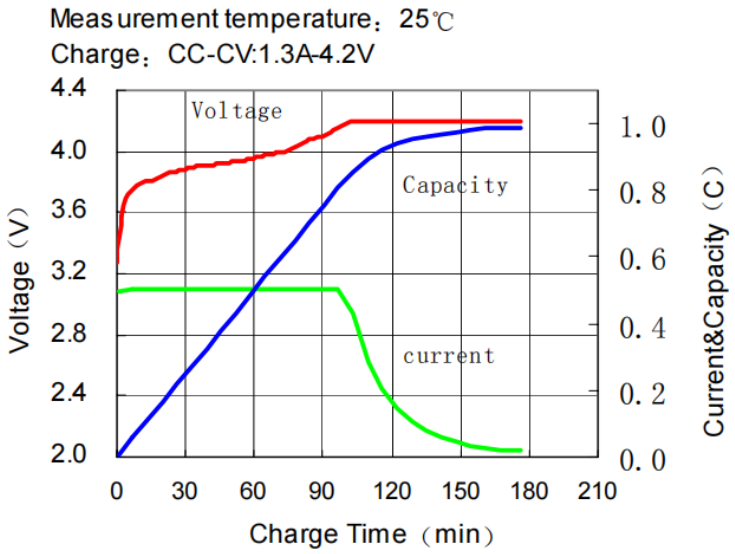

Rate Discharge Characteristics

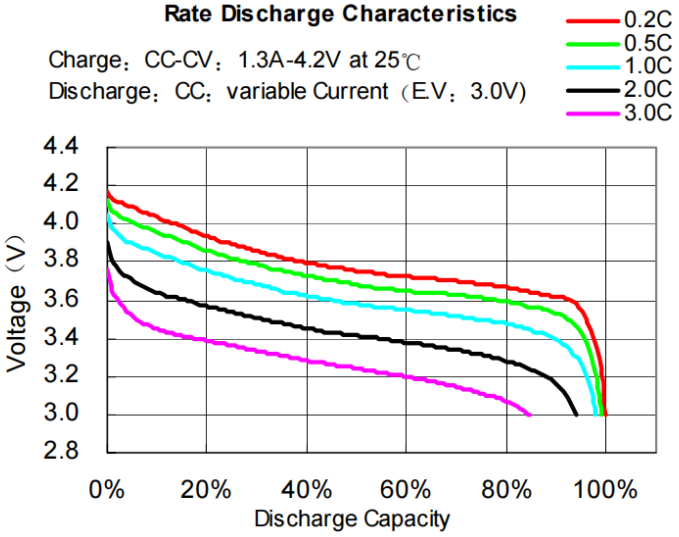

ANNOUNCEMENT

- Avoid using unauthorized charging devices.
- Do not charge LiPo batteries in the model as you can not successfully monitor and move them quickly if necessary.
- Never charge a damaged or inflated battery.
- Always use a proper balance discharger when discharging your batteries
- Follow all safe operating guidelines and recommendations provided by the manufacturer.
- Always charge the battery in an isolated safe area away from any flammable/combustible materials. Never charge a LiPo battery on a wooden workbench, inside an automobile,or on any flammable surface. Charge LiPo batteries on a concrete surface where there are no flammable objects within 10 feet (3 meters) of the charging area. Always charge your LiPo battery in a fireproof container.
- Always guard against any possible short circuit.
- Always charge batteries at a rate of 1c (one (times the capacity unless specified by the manufacturer.
- Never expose Batteries to extreme temperatures or direct sunlight. The temperature range must be between 40-120° F (4-49° C).
- Periodically check that the battery connectors and cables are intact.
- Never discharge your Li-Po battery below the Lowest Discharge Voltage. This may cause irreversible damage which will deteriorate battery performance and cycle life. An ESC with an adjustable low voltage cutoff is MANDATORY!