3.7V Lithium Polymer Battery Data Sheet

Model: 404855

Please Find More:

https://www.fpbattery.com/3-7v-1000mah-lithium-polymer-battery/

File Number: A/FP4855-5224

File Version: 01

CONTACT

CUSTOMER SERVICE
86.755.3682.7358
sales@fpbattery.com
Hours of Operation:
9:00am-6:00pm CST, Monday to Friday

LEARN MORE ON:
https://www.fpbattery.com/

DNK POWER COMPANY LIMITED

BATTERY SPECIFICATION

Part Number	DNK 404855
Nominal Voltage	3.7 V
Nominal Capacity	1055 mAh
Internal Impedence	<60mΩ
Charge Voltage	4.2V
Recommended Charge Current	0.2 C
Allowed Max Charge Current	0.5 C
Output Voltage Range	4.2 - 2.5 V
Recommended Discharge Current	0.2 C
Max Continuous Discharge Current	1 C
Pulse Discharge Current	3 C (10 mS)
Discharge Cut-off Voltage	2.5± 0.05V
Cycle Life to 80% Health	500 (0.2C, 25°C)

1

1 YEAR WARRANTY

Inflex and soler

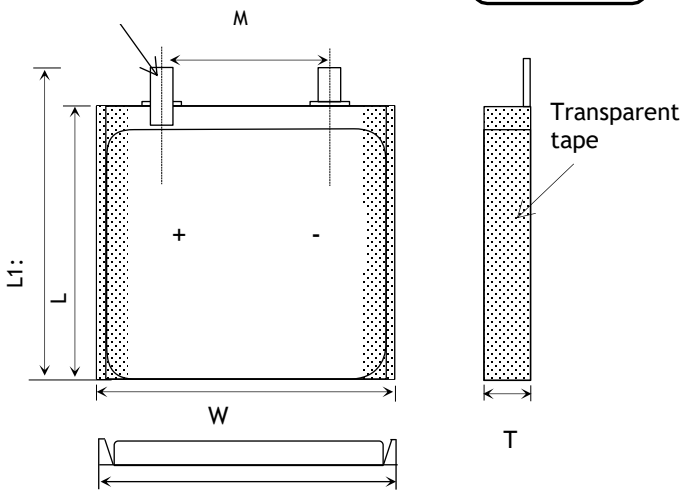

Item	Parameter (mm)
T	4
W	48
M	10
L	55
L_1	57
BL	57 ± 1
CL	100

ENVIRONMENTAL SPECIFICATIONS

Charging Temperature Range	0 - 45°C
Discharging Temperature Range	-20 - 60°C
Storage Period 1 Week	-20 - 45°C
Storage Period 1 Month	-10 - 45°C
Storage Period 6 Months	0 - 35°C

BATTERY PROTECTION

Over Charge	4.275 ± 50mV
Over Discharge	2.5V ± 50mV
Over Current	3A to 5A
Short Circuit	Yes

MECHANICAL SPECIFICATIONS

Dimensions	57x 48 x 4 mm(L*W*T)
Weight	Around 17 g
Battery Terminals	WC/ FL *

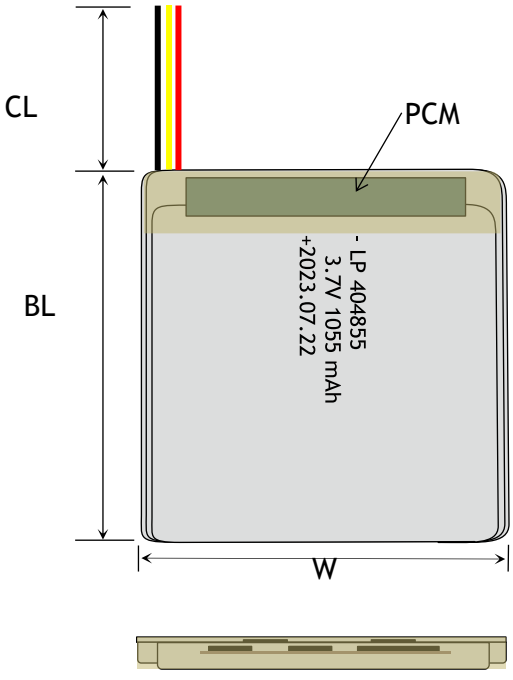

CERTIFICATION

Certification Approval	PLEASE CONSULT SALES

* aWC=With Connector FL=Flying Leads UWP=Blue Wrapped PVC
BWP=Black Wrapped PVC BC= Bare Cell

BULK PRODUCTION ACTUAL PICTURES



BARE CELL (BC)



FLYING LEADS (FL)



WITH CONNECTOR (WC)



BLUE WRAPPED PVC (UWP)



BLACK WRAPPED PVC (BWP)

3.7V LIPO BATTERY OPTIONS



Special Ingredients to make batteries work from -40 -85 ° C



Discharging Current up to 100C



Popular JST,Molex,Hirose,Anderson available



LED Power Indicator



Power Button



Upgrade to LifePo4 tech and life circle up to 1500

RELATIVE CURVES

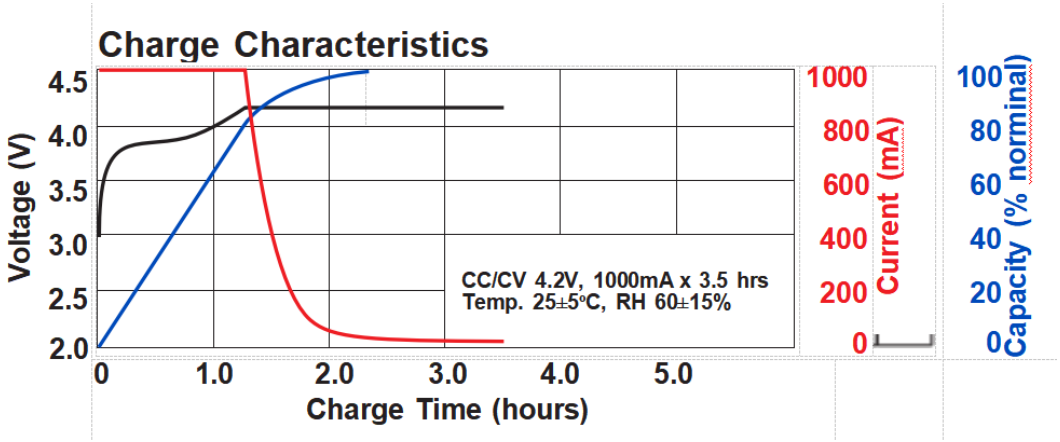

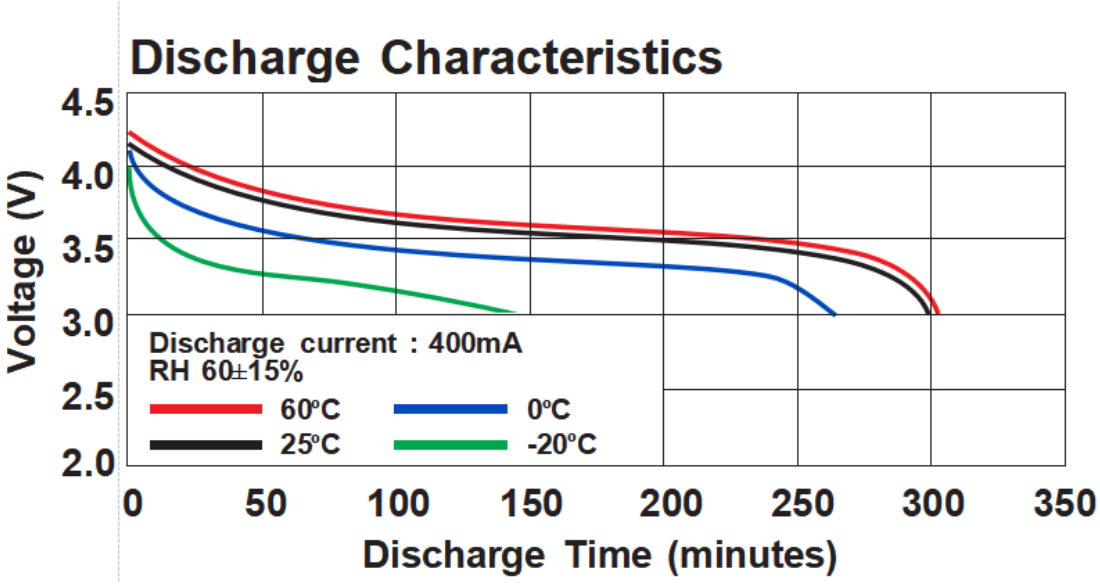

ANNOUNCEMENT

- ALWAYS provide information to the fire department on their arrival: room number or location of the fire and that Li-Ion or LiPo batteries are involved.
- Avoid frequent charging and discharging on the way to using the battery.
- Do not expose the battery to temperature extremes, such as high or low temperatures.
- Avoid using batteries that have exceeded their service life.
- Security or other responsible staff on site who may be called to take action in an emergency should be made aware of the location of the charging area, the means for isolating the power and the action to take in an emergency.
- Do not touch the battery to materials that are easily conductive.
- Avoid crushing or excessive pressure on the battery.
- If you start seeing any physical changes to the battery while discharging example puffing, STOP charging immediately and dispose of the battery responsibly.
- NEVER leave your LiPo battery unattended while charging.
- Check cell voltage after the first charge to verify that the voltage has not exceeded the maximum charge voltage (Please refer to Chart 1). Check the voltage of each cell via the balance connector to verify that the voltage of each cell has not exceeded the maximum value.
- Always charge the LiPo battery outdoors or in a ventilated area away from flammable objects and surfaces.