3.7V Lithium Polymer Battery Data Sheet

Model: 404668

Please Find More:

https://www.fpbattery.com/3-7v-1300mah-lithium-polymer-battery/

File Number: A/FP4668-11787

File Version: 01

CONTACT

CUSTOMER SERVICE
86.755.3682.7358
sales@fpbattery.com
Hours of Operation:
9:00am-6:00pm CST, Monday to Friday

LEARN MORE ON:
https://www.fpbattery.com/

DNK POWER COMPANY LIMITED

BATTERY SPECIFICATION

Part Number	DNK 404668
Nominal Voltage	3.7 V
Nominal Capacity	1300 mAh
Internal Impedence	<60mΩ
Charge Voltage	4.2V
Recommended Charge Current	0.2 C
Allowed Max Charge Current	0.5 C
Output Voltage Range	4.2 - 2.5 V
Recommended Discharge Current	0.2 C
Max Continuous Discharge Current	1 C
Pulse Discharge Current	3 C (10 mS)
Discharge Cut-off Voltage	2.5± 0.05V
Cycle Life to 80% Health	500 (0.2C, 25°C)

1

1 YEAR WARRANTY

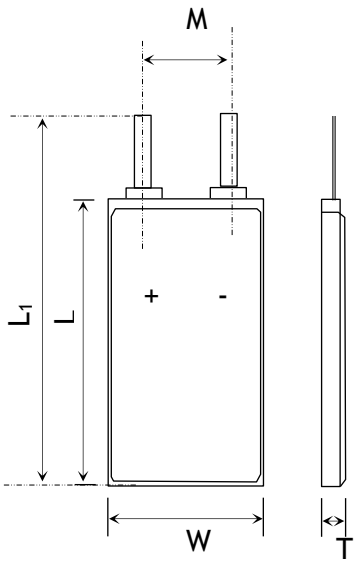

Item	Parameter (mm)
T	4
W	46
M	10
L	68
L_1	70
BL	70 ± 1
CL	100

ENVIRONMENTAL SPECIFICATIONS

Charging Temperature Range	0 - 45°C
Discharging Temperature Range	-20 - 60°C
Storage Period 1 Week	-20 - 45°C
Storage Period 1 Month	-10 - 45°C
Storage Period 6 Months	0 - 35°C

BATTERY PROTECTION

Over Charge	4.275 ± 50mV
Over Discharge	2.5V ± 50mV
Over Current	3A to 5A
Short Circuit	Yes

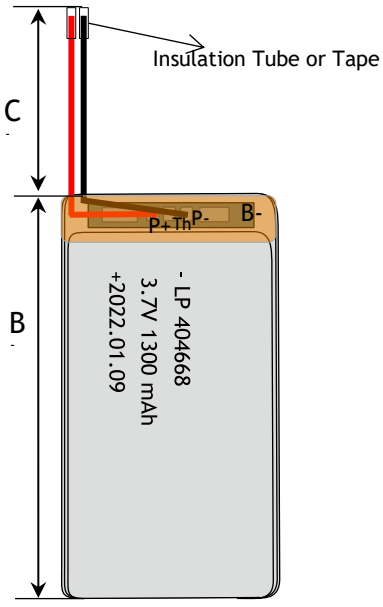

Kapton Tape



MECHANICAL SPECIFICATIONS

Dimensions	70x 46 x 4 mm(L*W*T)
Weight	Around 21 g
Battery Terminals	WC/ FL *

CERTIFICATION

Certification Approval	PLEASE CONSULT SALES

* WC=With Connector FL=Flying Leads UWP=Blue Wrapped PVC BWP=Black Wrapped PVC BC= Bare Cell

RELATIVE CURVES

Charge Characteristics

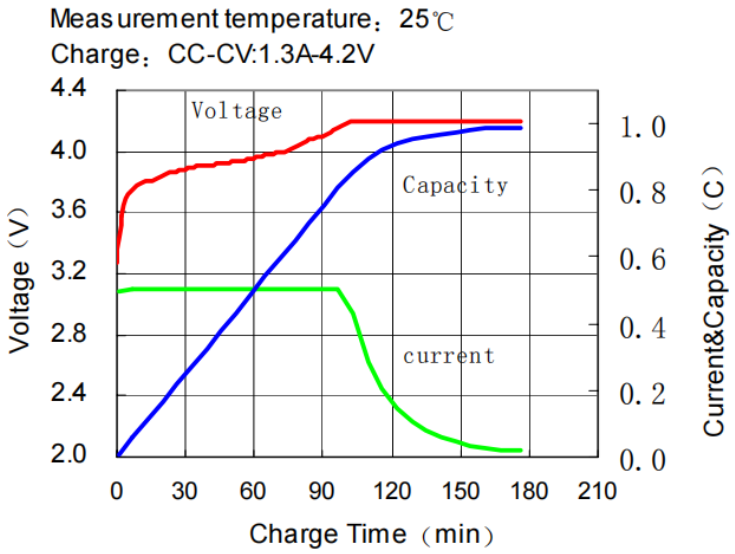

Rate Discharge Characteristics

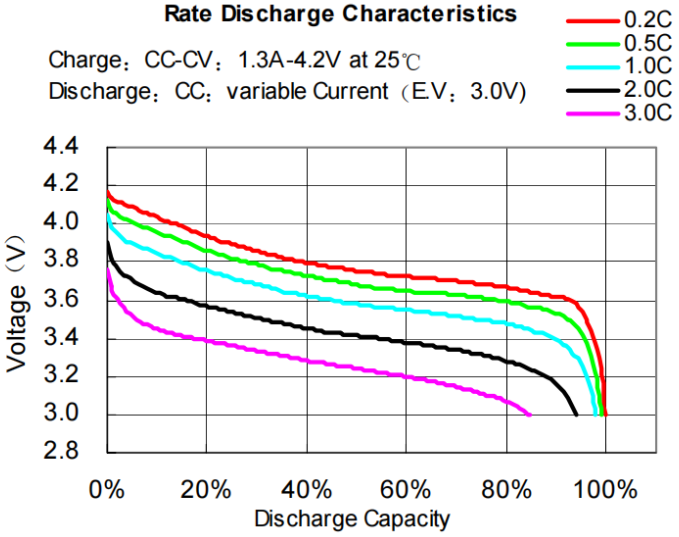

ANNOUNCEMENT

- Do not leave Lipo batteries unattended while charging.
- The battery must be charged to an ambient temperature of 10°C~45°C.
- Always remove your LiPo battery from your model while charging. Remove the battery from you model and allow it to cool to ambient temperature before re-charging.
- Before starting work,ensure that a written experimental protocol including safety information is available.
- Do not use batteries with physical damage, such as dented, cracked or leaking batteries.
- Never discharge battery to a level below 3V per cell under load.
- If the battery swells during charging, stop charging immediately and disconnect the battery from the charger. Leave the battery outside for a few hours and observe.
- Never charge Batteries inside of the model.
- Let batteries cool down prior to charging.
- Do not use water to extinguish a buttery fire Use a Class ABC dry fire extinguisher.
- When batteries are transported in a vehicle, temperatures should be higher than 14°F (-10°C) but not over 140°F (60°C) .