3.7V Lithium Polymer Battery Data Sheet

Model: 404585

Please Find More:

https://www.fpbattery.com/1500mah-lithium-polymer-battery/

File Number: A/FP4585-17994

File Version: 01

CONTACT

CUSTOMER SERVICE
86.755.3682.7358
sales@fpbattery.com
Hours of Operation:
9:00am-6:00pm CST, Monday to Friday

LEARN MORE ON:
https://www.fpbattery.com/

DNK POWER COMPANY LIMITED

BATTERY SPECIFICATION

Part Number	DNK 404585
Nominal Voltage	3.7 V
Nominal Capacity	1500 mAh
Internal Impedence	<60mΩ
Charge Voltage	4.2V
Recommended Charge Current	0.2 C
Allowed Max Charge Current	0.5 C
Output Voltage Range	4.2 - 2.5 V
Recommended Discharge Current	0.2 C
Max Continuous Discharge Current	1 C
Pulse Discharge Current	3 C (10 mS)
Discharge Cut-off Voltage	2.5± 0.05V
Cycle Life to 80% Health	500 (0.2C, 25°C)

1

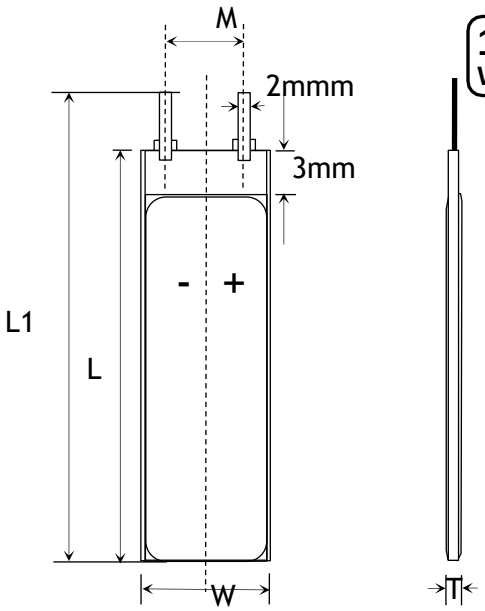

1 YEAR WARRANTY

Item	Parameter (mm)
T	4
W	45
M	10
L	85
L_1	87
BL	87 ± 1
CL	100

ENVIRONMENTAL SPECIFICATIONS

Charging Temperature Range	0 - 45°C
Discharging Temperature Range	-20 - 60°C
Storage Period 1 Week	-20 - 45°C
Storage Period 1 Month	-10 - 45°C
Storage Period 6 Months	0 - 35°C

BATTERY PROTECTION

Over Charge	4.275 ± 50mV
Over Discharge	2.5V ± 50mV
Over Current	3A to 5A
Short Circuit	Yes

MECHANICAL SPECIFICATIONS

Dimensions	87x 45 x 4 mm(L*W*T)
Weight	Around 25 g
Battery Terminals	WC/ FL *

CERTIFICATION

Certification Approval	PLEASE CONSULT SALES

* WC=With Connector FL=Flying Leads UWP=Blue Wrapped PVC BWP=Black Wrapped PVC BC= Bare Cell

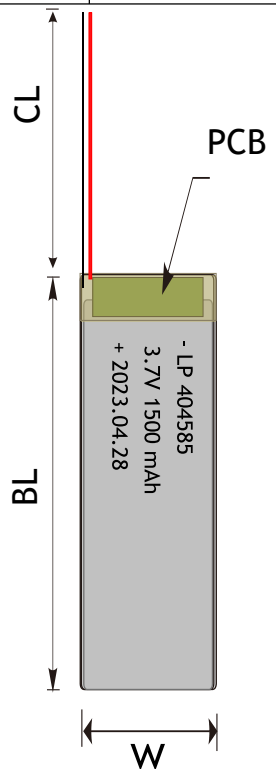

RELATIVE CURVES

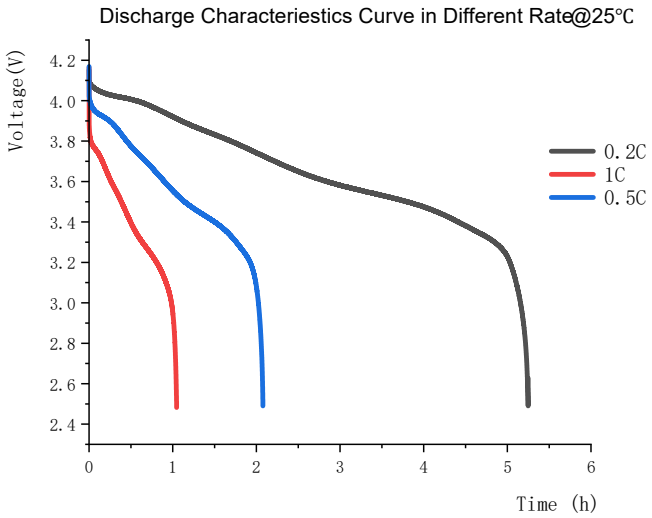

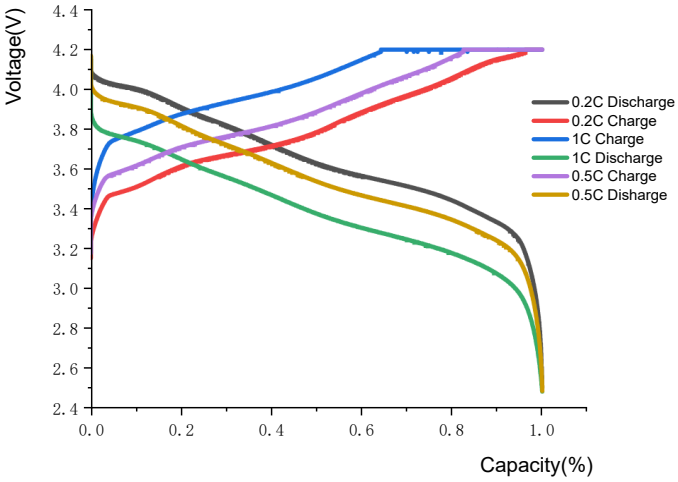

ANNOUNCEMENT

- Use the included charge lead (if applicable) for charging purposes only! DO NOT use the harness as a power adapter. Use of the charging harness as a power adapter may result in overheating of the battery connection resulting in melting of the plastic battery case.
- LiPo batteries must only be charged with a manufacturer recommended LiPo charger.
- Manually check the temperature of your LiPo battery pack constantly during charging. LiPo cells should never rise above ambient temperature when being charged.
- Never burn, overheat, disassemble, short-circuit, solder, puncture, crush or otherwise mutilate battery packs or cells.
- Dedicate a battery storage area free of combustible materials.
- Never alter, puncture or impact Batteries or related components.
- Obtain container to safely transport LiPo batteries between the labs and use locations. Remove from vehicle once at the destination.
- Do not apply excessive mechanical stress to the battery.
- Pay attention to the positive and negative connections of the battery to ensure proper connection.
- Be careful of the polarity when connecting and disconnecting batteries.
- During discharging and handling the batteries, do not exceed 160˚F (71˚C). Otherwise, the battery may be damaged and a fire may result.