3.7V Lithium Polymer Battery Data Sheet

Model: 404195

Please Find More:

https://www.fpbattery.com/3-7v-1600mah-lithium-polymer-battery/

File Number: A/FP4195-21217

File Version: 01

CONTACT

CUSTOMER SERVICE
86.755.3682.7358
sales@fpbattery.com
Hours of Operation:
9:00am-6:00pm CST, Monday to Friday

LEARN MORE ON:
https://www.fpbattery.com/

DNK POWER COMPANY LIMITED

BATTERY SPECIFICATION

Part Number	DNK 404195
Nominal Voltage	3.7 V
Nominal Capacity	1600 mAh
Internal Impedence	<60mΩ
Charge Voltage	4.2V
Recommended Charge Current	0.2 C
Allowed Max Charge Current	0.5 C
Output Voltage Range	4.2 - 2.5 V
Recommended Discharge Current	0.2 C
Max Continuous Discharge Current	1 C
Pulse Discharge Current	3 C (10 mS)
Discharge Cut-off Voltage	2.5± 0.05V
Cycle Life to 80% Health	500 (0.2C, 25°C)

1

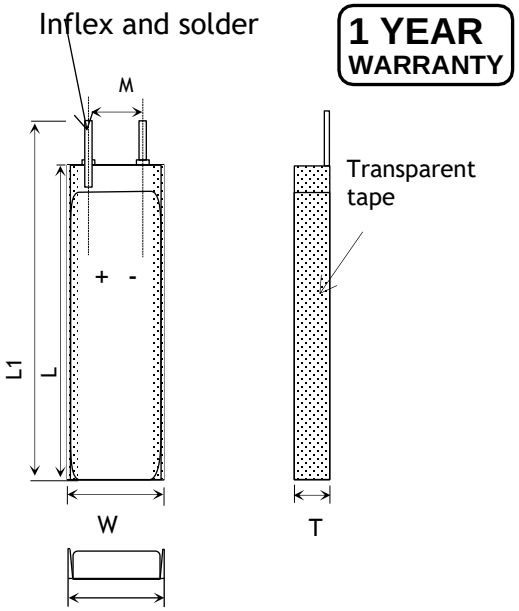

Item	Parameter (mm)
T	4
W	41
M	10
L	95
L_1	97
BL	97 ± 1
CL	100

ENVIRONMENTAL SPECIFICATIONS

Charging Temperature Range	0 - 45°C
Discharging Temperature Range	-20 - 60°C
Storage Period 1 Week	-20 - 45°C
Storage Period 1 Month	-10 - 45°C
Storage Period 6 Months	0 - 35°C

BATTERY PROTECTION

Over Charge	4.275 ± 50mV
Over Discharge	2.5V ± 50mV
Over Current	3A to 5A
Short Circuit	Yes

MECHANICAL SPECIFICATIONS

Dimensions	97x 41 x 4 mm(L*W*T)
Weight	26 g
Battery Terminals	WC/ FL *

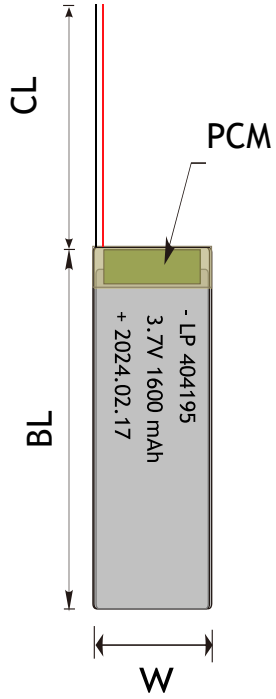

CERTIFICATION

Certification Approval	PLEASE CONSULT SALES

* WC=With Connector FL=Flying Leads UWP=Blue Wrapped PVC BWP=Black Wrapped PVC BC= Bare Cell

BULK PRODUCTION ACTUAL PICTURES



BARE CELL (BC)



FLYING LEADS (FL)



WITH CONNECTOR (WC)



BLUE WRAPPED PVC (UWP)



BLACK WRAPPED PVC (BWP)

3.7V LIPO BATTERY OPTIONS

Special Ingredients to make batteries work from -40 -85 ° C

Discharging Current up to 100C

Popular JST,Molex,Hirose,Anderson available

LED Power Indicator

Power Button

Upgrade to LifePo4 tech and life circle up to 1500

RELATIVE CURVES

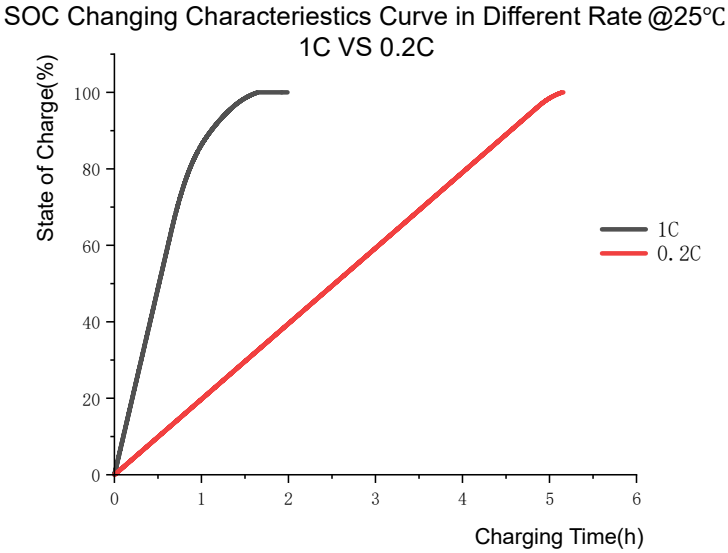

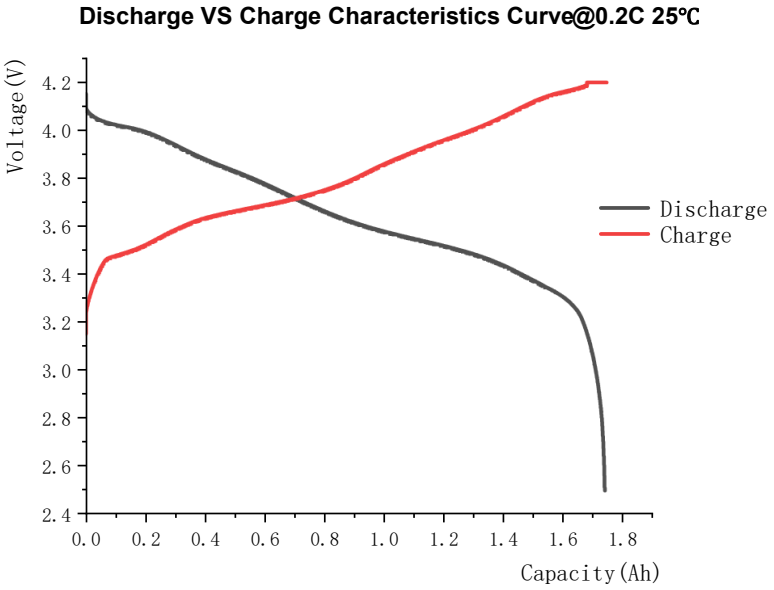

ANNOUNCEMENT

- Do not use water to extinguish a buttery fire Use a Class ABC dry fire extinguisher.
- The cells shall never be soaked with liquids such as water, seawater drinks such as soft drinks, juices coffee or others.
- When replacing batteries, make sure to use batteries of the same type, size and brand.
- Avoid passive or active short-circuiting of the battery.
- Never charge the battery inside a Vehicle.
- Never expose Batteries to extreme temperatures or direct sunlight. The temperature range must be between 40-120° F (4-49° C).
- Exercise caution with new products like E-Scooters where all safety considerations may not be recognized or that may encourage cheap knock-offs built without adherent to safety standards.
- Do not charge LiPo batteries in the model as you can not successfully monitor and move them quickly if necessary.
- Always check the voltage of Batteries before each charge session in order to ensure they are at or above the minimum safe starting voltage. If starting voltage is below recommended levels than Batteries have been over discharged or have experienced a failure and should NOT be charged
- Do not inhale the smoke/fumes of a LiPo battery that is on fire. The smoke is toxic. Leave the area and call 911.
- Reacting and leaking batteries are considered hazardous waste. Please consult Emergency Procedures below.