3.7V Lithium Polymer Battery Data Sheet

Model: 404088

Please Find More:

https://www.fpbattery.com/3-7v-1400mah-lithium-polymer-battery/

File Number: A/FP4088-20480

File Version: 01

CONTACT

CUSTOMER SERVICE
86.755.3682.7358
sales@fpbattery.com
Hours of Operation:
9:00am-6:00pm CST, Monday to Friday

LEARN MORE ON:
https://www.fpbattery.com/

DNK POWER COMPANY LIMITED

BATTERY SPECIFICATION

Part Number	DNK 404088
Nominal Voltage	3.7 V
Nominal Capacity	1400 mAh
Internal Impedence	<60mΩ
Charge Voltage	4.2V
Recommended Charge Current	0.2 C
Allowed Max Charge Current	0.5 C
Output Voltage Range	4.2 - 2.5 V
Recommended Discharge Current	0.2 C
Max Continuous Discharge Current	1 C
Pulse Discharge Current	3 C (10 mS)
Discharge Cut-off Voltage	2.5± 0.05V
Cycle Life to 80% Health	500 (0.2C, 25°C)

1

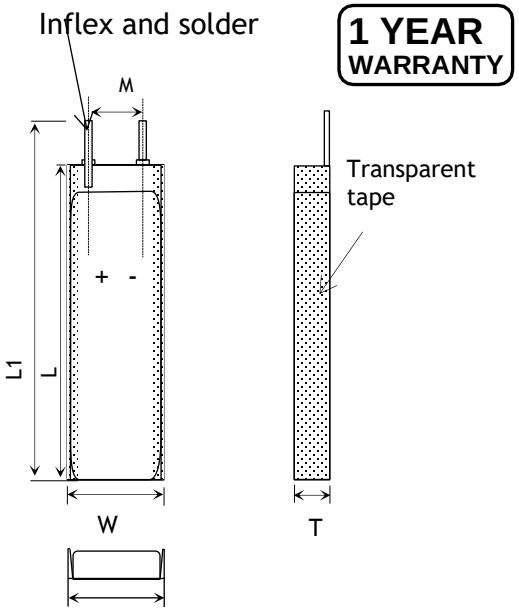

Item	Parameter (mm)
T	4
W	40
M	10
L	88
L_1	90
BL	90 ± 1
CL	100

ENVIRONMENTAL SPECIFICATIONS

Charging Temperature Range	0 - 45°C
Discharging Temperature Range	-20 - 60°C
Storage Period 1 Week	-20 - 45°C
Storage Period 1 Month	-10 - 45°C
Storage Period 6 Months	0 - 35°C

BATTERY PROTECTION

Over Charge	4.275 ± 50mV
Over Discharge	2.5V ± 50mV
Over Current	3A to 5A
Short Circuit	Yes

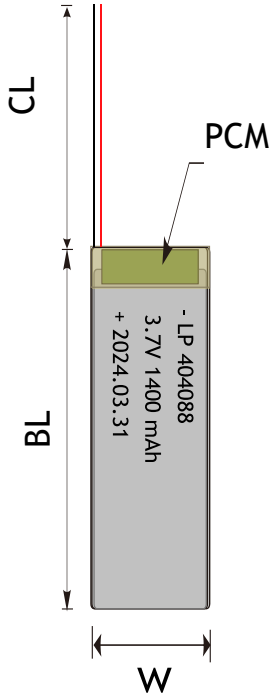

MECHANICAL SPECIFICATIONS

Dimensions	90x 40 x 4 mm(L*W*T)
Weight	23 g
Battery Terminals	WC/ FL *

CERTIFICATION

Certification Approval	PLEASE CONSULT SALES

* WC=With Connector FL=Flying Leads UWP=Blue Wrapped PVC BWP=Black Wrapped PVC BC= Bare Cell

BULK PRODUCTION ACTUAL PICTURES



BARE CELL (BC)



FLYING LEADS (FL)



WITH CONNECTOR (WC)



BLUE WRAPPED PVC (UWP)



BLACK WRAPPED PVC (BWP)

3.7V LIPO BATTERY OPTIONS

Special Ingredients to make batteries work from -40 -85 ° C

Discharging Current up to 100C

Popular JST,Molex,Hirose,Anderson available

LED Power Indicator

Power Button

Upgrade to LifePo4 tech and life circle up to 1500

Charge & Discharge Characteriestics in different Rate@25℃

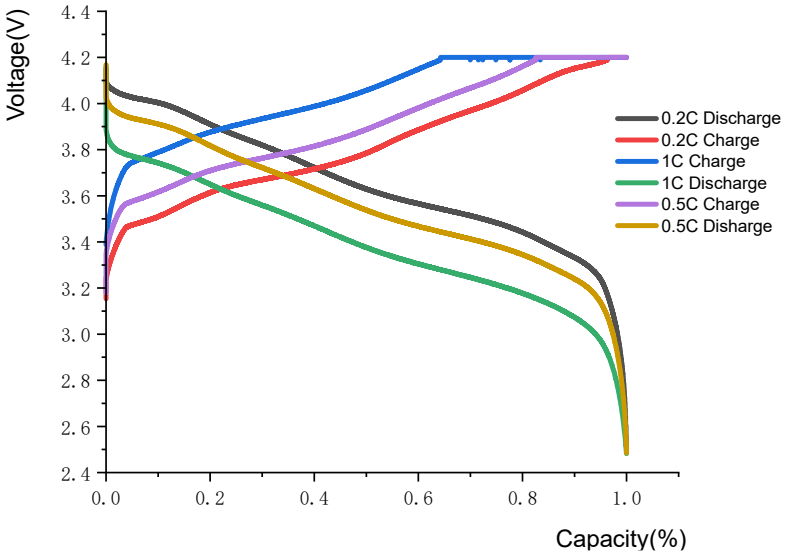

Discharge VS Charge Characteristics Curve@0.2C 25℃

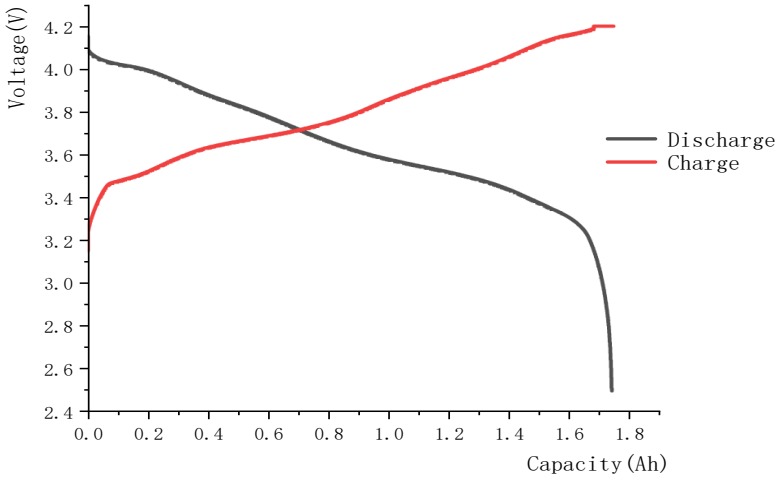

RELATIVE CURVES

ANNOUNCEMENT

- Charging with higher current than recommended value may cause damage to cell electrical, mechanical and safety performance and could lead to heat generation or leakage.
- Always balance charge batteries using the charger's balance charging option. Otherwise, an unbalanced cell may become over charged. This will reduce the life of the battery, and possibly cause a fire which could result in personal injury and property damage.
- Avoid bumping or dropping the battery to prevent damage or internal short circuit.
- Never charge the battery at a current exceeding 2C (2 x the capacity of the battery). A higher charge rate may cause fire.
- Stop using or charging the battery immediately if the battery becomes or appears damaged, gives off an odor, becomes discolored or deformed, starts to balloon or swell, leaks, exceeds a temperature of 160°F (71°C), or if any other abnormality is detected. Disconnect the battery and observe it in a safe area outside of any building or vehicle and away from any combustible materials. These abnormalities may cause the battery to leak, and the reaction with air may cause the chemical materials inside to ignite. Because delayed chemical reactions may occur (a battery can still ignite even after 10 minutes), you should continue observing the battery for at least 15 minutes as a safety precaution.
- Do not place the battery near flammable materials.
- Never drop this type of battery, it will be deformed and we advise you never to try to charge a deformed battery as this may cause swelling, leakage and even fire.
- Do not use batteries with physical damage, such as dented, cracked or leaking batteries.

- During transportation and storage, ensure effective measures are employed to prevent shortcircuit.
- Avoid storing unused batteries for long periods of time, and perform regular battery maintenance and charging.
- ALWAYS read and follow the manufacturer's instructions for charging, use, maintenance, and storage.