3.7V Lithium Polymer Battery Data Sheet

Model: 404076

Please Find More:

https://www.fpbattery.com/1200mah-lipo-battery/

File Number: A/FP4076-18081

File Version: 01

CONTACT

CUSTOMER SERVICE
86.755.3682.7358
sales@fpbattery.com
Hours of Operation:
9:00am-6:00pm CST, Monday to Friday

LEARN MORE ON:
https://www.fpbattery.com/

DNK POWER COMPANY LIMITED

BATTERY SPECIFICATION

Part Number	DNK 404076
Nominal Voltage	3.7 V
Nominal Capacity	1200 mAh
Internal Impedence	<60mΩ
Charge Voltage	4.2V
Recommended Charge Current	0.2 C
Allowed Max Charge Current	0.5 C
Output Voltage Range	4.2 - 2.5 V
Recommended Discharge Current	0.2 C
Max Continuous Discharge Current	1 C
Pulse Discharge Current	3 C (10 mS)
Discharge Cut-off Voltage	2.5± 0.05V
Cycle Life to 80% Health	500 (0.2C, 25°C)

1

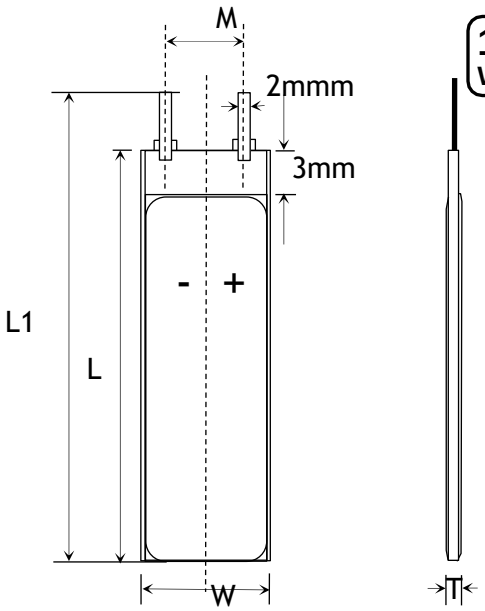

1 YEAR WARRANTY

Item	Parameter (mm)
T	4
W	40
M	10
L	76
L_1	78
BL	78 ± 1
CL	100

ENVIRONMENTAL SPECIFICATIONS

Charging Temperature Range	0 - 45°C
Discharging Temperature Range	-20 - 60°C
Storage Period 1 Week	-20 - 45°C
Storage Period 1 Month	-10 - 45°C
Storage Period 6 Months	0 - 35°C

BATTERY PROTECTION

Over Charge	4.275 ± 50mV
Over Discharge	2.5V ± 50mV
Over Current	3A to 5A
Short Circuit	Yes

MECHANICAL SPECIFICATIONS

Dimensions	78x 40 x 4 mm(L*W*T)
Weight	Around 20 g
Battery Terminals	WC/ FL *

CERTIFICATION

Certification Approval	PLEASE CONSULT SALES

* WC=With Connector FL=Flying Leads UWP=Blue Wrapped PVC BWP=Black Wrapped PVC BC= Bare Cell

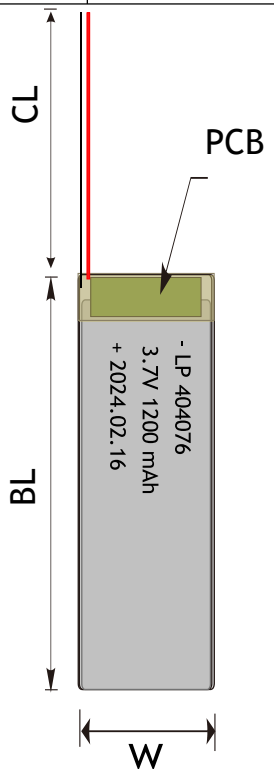

RELATIVE CURVES

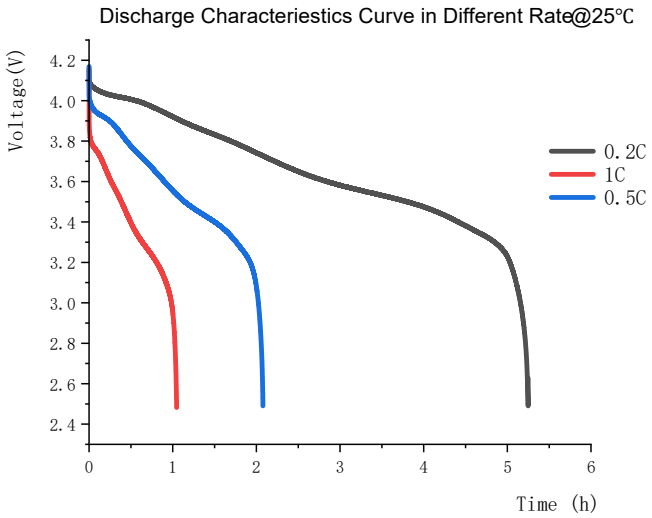

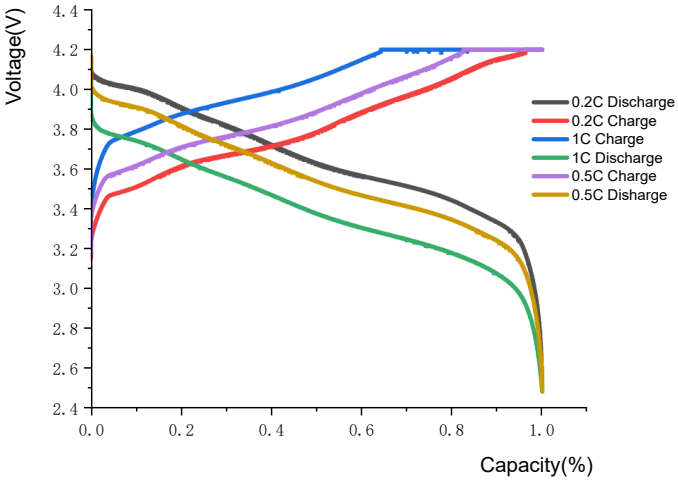

ANNOUNCEMENT

- Avoid using chargers with long charging times.
- Obtain infrared thermometer for remote battery temperature monitoring.
- Use a dedicated lithium polymer battery charger and ensure that it meets the charging requirements of the battery.
- Avoid frequent charging and discharging on the way to using the battery.
- Never immerse the battery in water or allow it to get wet.
- Do not puncture the cells as this could cause a fire.
- Do not short-circuit the battery.
- For best practice store standard lipo batteries at 3.80 volts +/.05 volts per cell. Or at the manufacturer's suggested storage voltage for non standard chemistry's
- Always balance charge batteries using the charger’s balance charging option. Otherwise, an unbalanced cell may become over charged. This will reduce the life of the battery, and possibly cause a fire which could result in personal injury and property damage.
- Do not charge a Lipo battery mat has 'ballooned' or 'puffed up', or shows any signs of leakage or physical damage.
- Always use a balancer board to charge LiPo Battery with more than 1 cell.