3.7V Lithium Polymer Battery Data Sheet

Model: 403962

Please Find More:

https://www.fpbattery.com/3-7v-900mah-lithium-polymer-battery/

File Number: A/FP3962-13755

File Version: 01

CONTACT

CUSTOMER SERVICE
86.755.3682.7358
sales@fpbattery.com
Hours of Operation:
9:00am-6:00pm CST, Monday to Friday

LEARN MORE ON:
https://www.fpbattery.com/

DNK POWER COMPANY LIMITED

BATTERY SPECIFICATION

Part Number	DNK 403962
Nominal Voltage	3.7 V
Nominal Capacity	965 mAh
Internal Impedence	<60mΩ
Charge Voltage	4.2V
Recommended Charge Current	0.2 C
Allowed Max Charge Current	0.5 C
Output Voltage Range	4.2 – 2.5 V
Recommended Discharge Current	0.2 C
Max Continuous Discharge Current	1 C
Pulse Discharge Current	3 C (10 mS)
Discharge Cut-off Voltage	2.5± 0.05V
Cycle Life to 80% Health	500 (0.2C, 25°C)

1

1 YEAR WARRANTY

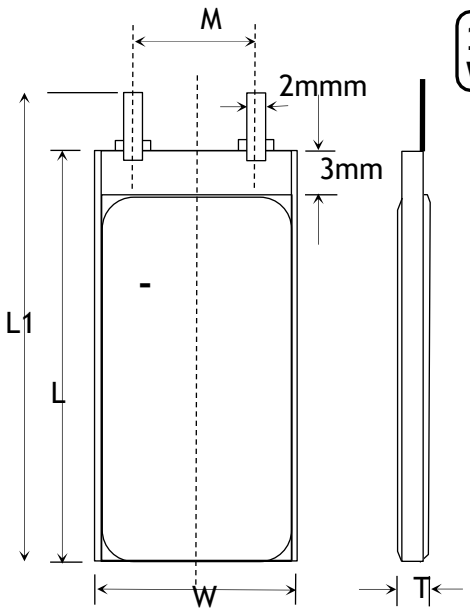

Item	Parameter (mm)
T	4
W	39
M	10
L	62
L_1	64
BL	64 ± 1
CL	100

ENVIRONMENTAL SPECIFICATIONS

Charging Temperature Range	0 – 45°C
Discharging Temperature Range	-20 – 60°C
Storage Period 1 Week	-20 – 45°C
Storage Period 1 Month	-10 – 45°C
Storage Period 6 Months	0 – 35°C

BATTERY PROTECTION

Over Charge	4.275 ± 50mV
Over Discharge	2.5V ± 50mV
Over Current	3A to 5A
Short Circuit	Yes

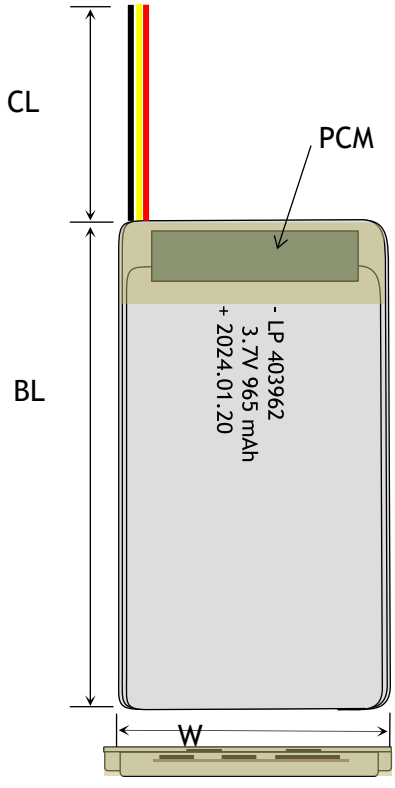

MECHANICAL SPECIFICATIONS

Dimensions	64x 39 x 4 mm(L*W*T)
Weight	Around 16 g
Battery Terminals	WC/ FL *

CERTIFICATION

Certification Approval	PLEASE CONSULT SALES

* WC=With Connector FL=Flying Leads UWP=Blue Wrapped PVC BWP=Black Wrapped PVC BC= Bare Cell

RELATIVE CURVES

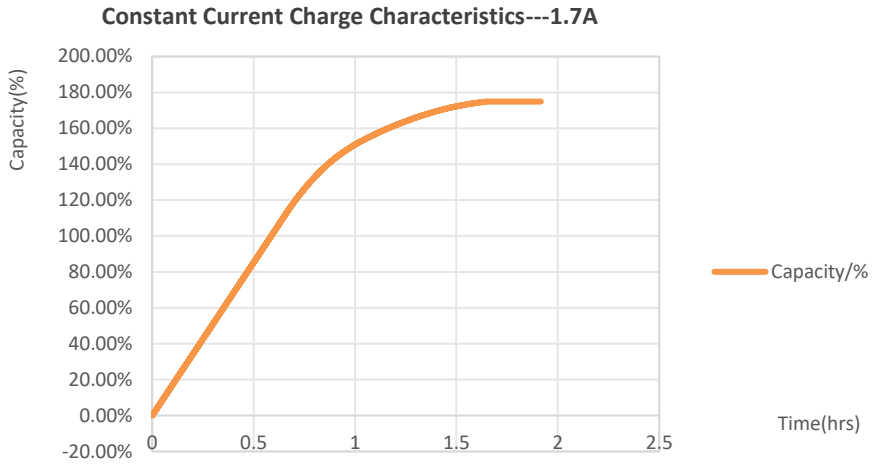

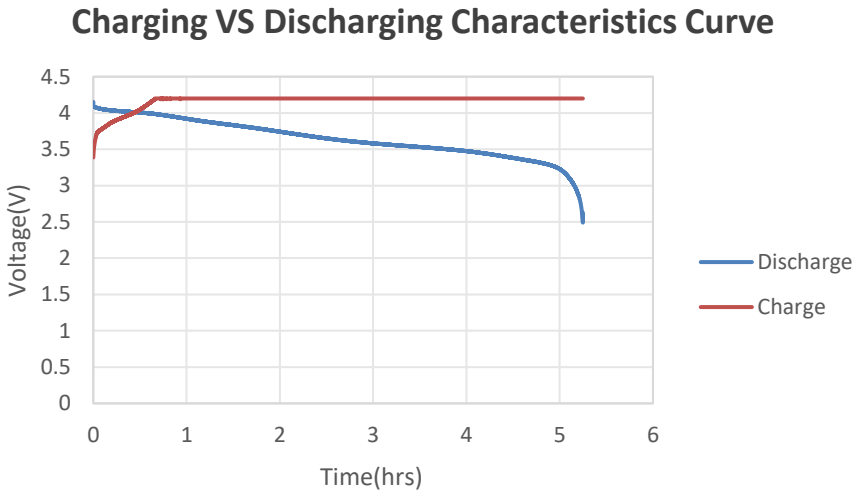

ANNOUNCEMENT

- Intact batteries can be disposed of as Universal Waste. If the battery is greater than 9V, tape the terminals before disposal.
- NEVER put discarded batteries in piles.
- Use a dedicated lithium polymer battery charger and ensure that it meets the charging requirements of the battery.
- Use high quality battery connectors. Using connectors that do not fit tightly into the battery socket may result in overheating and melting of the battery case. Remove the connectors from the battery after EVERY use and during storage. Failure to do so will result in plug fatigue resulting in a bad connection and possible case melting. Replace connectors frequently to preserve good connections.
- LiPo batteries must only be charged with a manufacturer recommended LiPo charger.
- Never charge a battery that shows signs of puffing.
- Always follow the manufacturer's safety instructions
- The battery must be protected from physical contact with any other part of the model.
- Avoid placing the battery in a damp environment.
- Avoid restarting the device frequently on the way to using the battery.
- If the electrolyte in the cells gets on your skin, wash the area thoroughly with soap and water. If it gets in your eyes, rinse at emergency eyewash station for 15 minutes with cool water and seek immediate medical attention.