3.7V Lithium Polymer Battery Data Sheet

Model: 403852

Please Find More:

https://www.fpbattery.com/3-7v-750mah-lithium-polymer-battery/

File Number: A/FP3852-9929

File Version: 01

CONTACT

CUSTOMER SERVICE
86.755.3682.7358
sales@fpbattery.com
Hours of Operation:
9:00am-6:00pm CST, Monday to Friday

LEARN MORE ON:
https://www.fpbattery.com/

DNK POWER COMPANY LIMITED

BATTERY SPECIFICATION

Part Number	DNK 403852
Nominal Voltage	3.7 V
Nominal Capacity	790 mAh
Internal Impedence	<60mΩ
Charge Voltage	4.2V
Recommended Charge Current	0.2 C
Allowed Max Charge Current	0.5 C
Output Voltage Range	4.2 - 2.5 V
Recommended Discharge Current	0.2 C
Max Continuous Discharge Current	1 C
Pulse Discharge Current	3 C (10 mS)
Discharge Cut-off Voltage	2.5± 0.05V
Cycle Life to 80% Health	500 (0.2C, 25°C)

1

ENVIRONMENTAL SPECIFICATIONS

Charging Temperature Range	0 - 45°C
Discharging Temperature Range	-20 - 60°C
Storage Period 1 Week	-20 - 45°C
Storage Period 1 Month	-10 - 45°C
Storage Period 6 Months	0 - 35°C

BATTERY PROTECTION

Over Charge	4.275 ± 50mV
Over Discharge	2.5V ± 50mV
Over Current	3A to 5A
Short Circuit	Yes

MECHANICAL SPECIFICATIONS

Dimensions	54x 38 x 4 mm(L*W*T)
Weight	13 g
Battery Terminals	WC/ FL *

CERTIFICATION

Certification Approval	PLEASE CONSULT SALES

* WC=With Connector FL=Flying Leads UWP=Blue Wrapped PVC BWP=Black Wrapped PVC BC= Bare Cell

Inflex and soler

1 YEAR WARRANTY

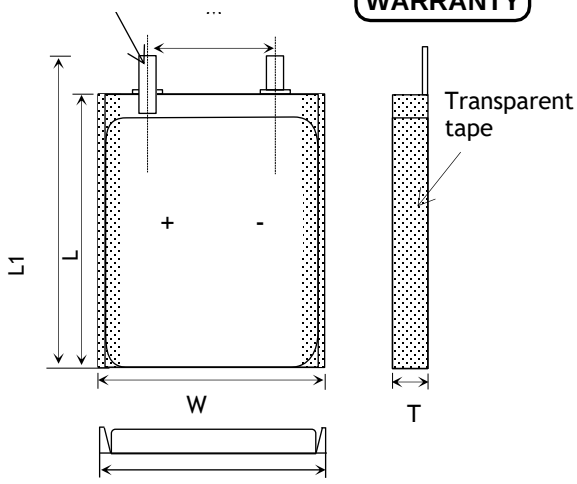

Item	Parameter (mm)
T	4
W	38
M	10
L	52
L_1	54
BL	54 ± 1
CL	100

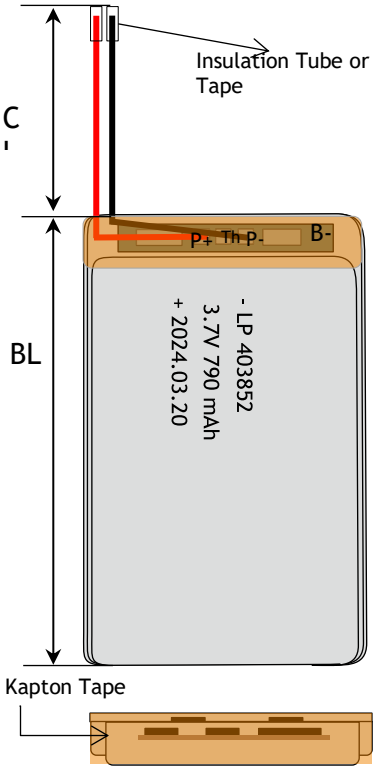

BULK PRODUCTION ACTUAL PICTURES



BARE CELL (BC)



FLYING LEADS (FL)



WITH CONNECTOR (WC)



BLUE WRAPPED PVC (UWP)



BLACK WRAPPED PVC (BWP)

3.7V LIPO BATTERY OPTIONS

Special Ingredients to make batteries work from -40 -85 ° C

Discharging Current up to 100C

Popular JST,Molex,Hirose,Anderson available





LED Power Indicator



Power Button

RELATIVE CURVES

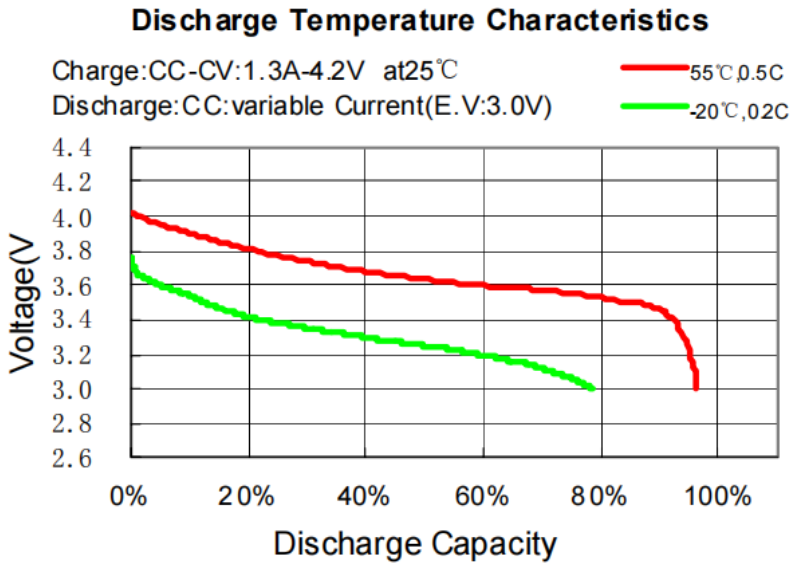

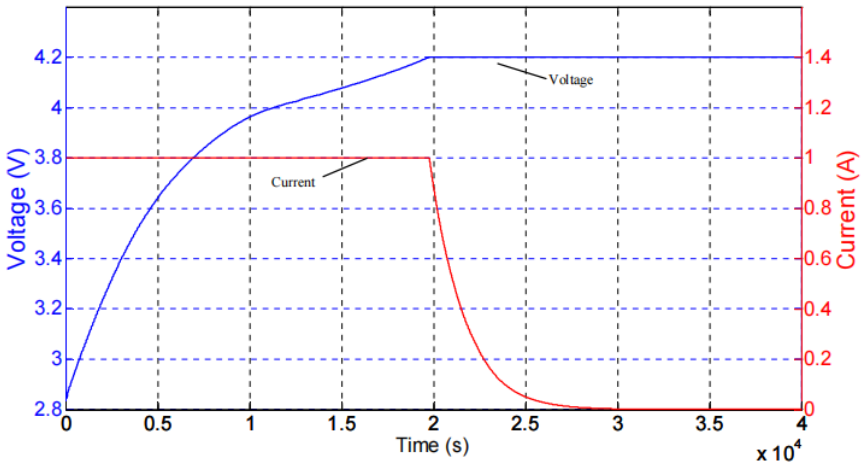

ANNOUNCEMENT

- Do not crush or bend the battery.
- ALWAYS read and follow the manufacturer's instructions for charging, use, maintenance, and storage.
- Do not expose the battery to direct sunlight for extended periods of time.
- Store Li-Ion batteries and devices in dry, cool locations and in fire-resistant containers.
- Avoid restarting the device frequently on the way to using the battery.
- Do not store your cells in a hot place (i.e. in your car on a hot day) as this may cause them to catch fire or even explode.
- A LiPo Sack or metal/ceramic storage container is safest. Always store your LiPo’s partially charged so they maintain their performance levels overtime; there is no need to cycle them unless When storing batteries for extended periods, store at a half charged state. stored for periods longer than 36 months.
- DO NOT make or build your own charging circuit.
- Do not reverse the polarity.
- Discharging capacity can't exceed 80% of the max capacity after full charging to ensure a good cycle performance
- Use only a charger designed for charging LiPo batteries. Never use any other type of charger.