3.7V Lithium Polymer Battery Data Sheet

Model: 403775

Please Find More:

https://www.fpbattery.com/3-7v-1100mah-lithium-polymer-battery/

File Number: A/FP3775-19378

File Version: 01

CONTACT

CUSTOMER SERVICE
86.755.3682.7358
sales@fpbattery.com
Hours of Operation:
9:00am-6:00pm CST, Monday to Friday

LEARN MORE ON:
https://www.fpbattery.com/

DNK POWER COMPANY LIMITED

BATTERY SPECIFICATION

Part Number	DNK 403775
Nominal Voltage	3.7 V
Nominal Capacity	1100 mAh
Internal Impedence	<60mΩ
Charge Voltage	4.2V
Recommended Charge Current	0.2 C
Allowed Max Charge Current	0.5 C
Output Voltage Range	4.2 - 2.5 V
Recommended Discharge Current	0.2 C
Max Continuous Discharge Current	1 C
Pulse Discharge Current	3 C (10 mS)
Discharge Cut-off Voltage	2.5± 0.05V
Cycle Life to 80% Health	500 (0.2C, 25°C)

1

ENVIRONMENTAL SPECIFICATIONS

Charging Temperature Range	0 - 45°C
Discharging Temperature Range	-20 - 60°C
Storage Period 1 Week	-20 - 45°C
Storage Period 1 Month	-10 - 45°C
Storage Period 6 Months	0 - 35°C

BATTERY PROTECTION

Over Charge	4.275 ± 50mV
Over Discharge	2.5V ± 50mV
Over Current	3A to 5A
Short Circuit	Yes

MECHANICAL SPECIFICATIONS

Dimensions	77x 37 x 4 mm(L*W*T)
Weight	Around 18 g
Battery Terminals	WC/ FL *

CERTIFICATION

Certification Approval	PLEASE CONSULT SALES

* WC=With Connector FL=Flying Leads UWP=Blue Wrapped PVC BWP=Black Wrapped PVC BC= Bare Cell

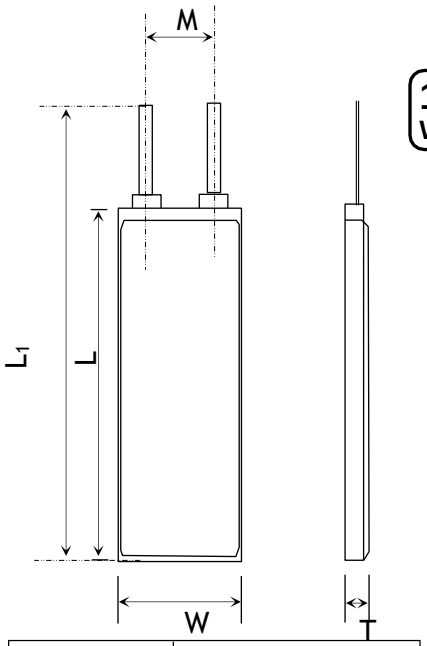

1 YEAR WARRANTY

Item	Parameter (mm)
T	4
W	37
M	10
L	75
L_1	77
BL	77 ± 1
CL	100

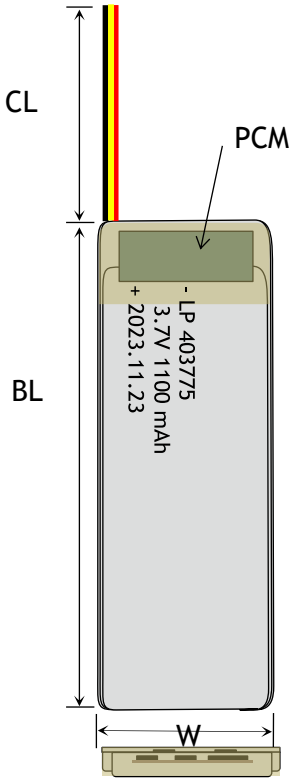

BULK PRODUCTION ACTUAL PICTURES



BARE CELL (BC)



FLYING LEADS (FL)



WITH CONNECTOR (WC)



BLUE WRAPPED PVC (UWP)



BLACK WRAPPED PVC (BWP)

3.7V LIPO BATTERY OPTIONS

Special Ingredients to make batteries work from -40 -85 ° C

Discharging Current up to 100C

Popular JST,Molex,Hirose,Anderson available

LED Power Indicator

Power Button

Upgrade to LifePo4 tech and life circle up to 1500

RELATIVE CURVES

Charge & Discharge Characteriestics in different Rate@25℃

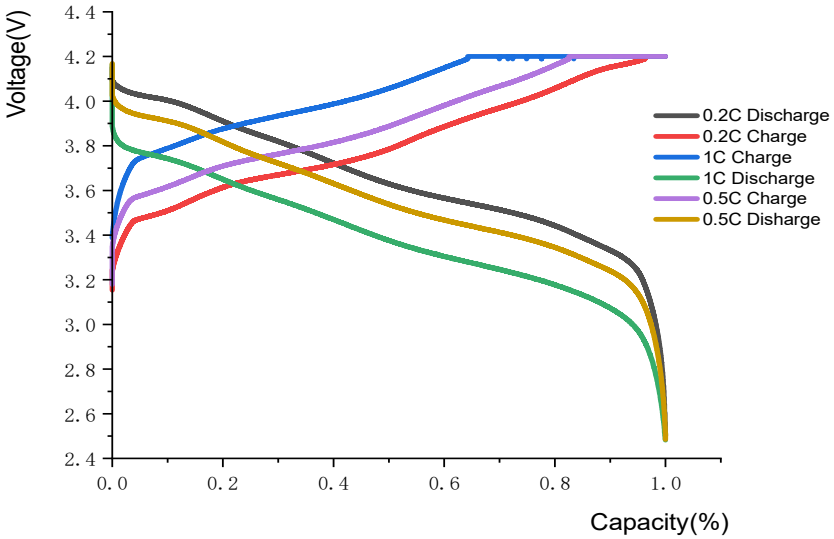

0.2C Discharging Characteriestics Curve@25℃

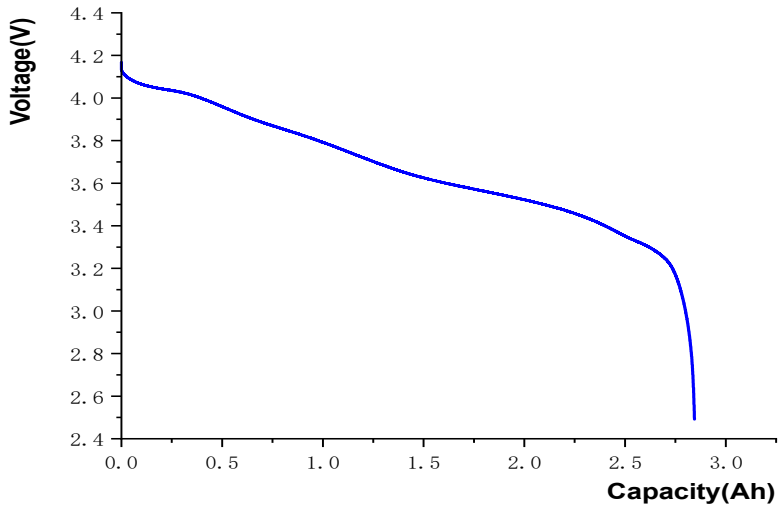

ANNOUNCEMENT

- If leaking material is present, do not touch it.
- Never charge the battery inside a Vehicle.
- Use a reliable power adapter to avoid unstable current output.
- Do not charge dissimilar or un-matched packs in series or parallel with any difference in cell type, cell capacity, manufacturer, age, pack capacity or charge state (+/0.03V per cell). If in any doubt, always charge them separately.
- Do not 'peak charge' or 'top off' Lipo batteries always remove Lipo batteries from a charger once they are charged.
- Ensure that charging leads are connected correctly. Reverse charging can lead to cell damage, fire or explosion.
- Never put LiPo batteries or battery packs in pockets, drawers or bags where they might make contact with something made of metal. This can cause a short circuit.
- Ensure that you purchase the right type and size of battery that matches the requirements of your equipment.
- Do not use a battery that has been over-discharged.
- NEVER charge a Li-ion or LiPo battery overnight and unattended.
- Protect from the frost, and also temperatures above 60 degrees Centigrade. Batteries should never be in the sun, on hot surfaces.