3.7V Lithium Polymer Battery Data Sheet

Model: 403439

Please Find More:

https://www.fpbattery.com/3-7v-500mah-lithium-polymer-battery/

File Number: A/FP3439-5240

File Version: 01

CONTACT

CUSTOMER SERVICE
86.755.3682.7358
sales@fpbattery.com
Hours of Operation:
9:00am-6:00pm CST, Monday to Friday

LEARN MORE ON:
https://www.fpbattery.com/

DNK POWER COMPANY LIMITED

BATTERY SPECIFICATION

Part Number	DNK 403439
Nominal Voltage	3.7 V
Nominal Capacity	530 mAh
Internal Impedence	<60mΩ
Charge Voltage	4.2V
Recommended Charge Current	0.2 C
Allowed Max Charge Current	0.5 C
Output Voltage Range	4.2 - 2.5 V
Recommended Discharge Current	0.2 C
Max Continuous Discharge Current	1 C
Pulse Discharge Current	3 C (10 mS)
Discharge Cut-off Voltage	2.5± 0.05V
Cycle Life to 80% Health	500 (0.2C, 25°C)

1

1 YEAR WARRANTY

Inflex and soler

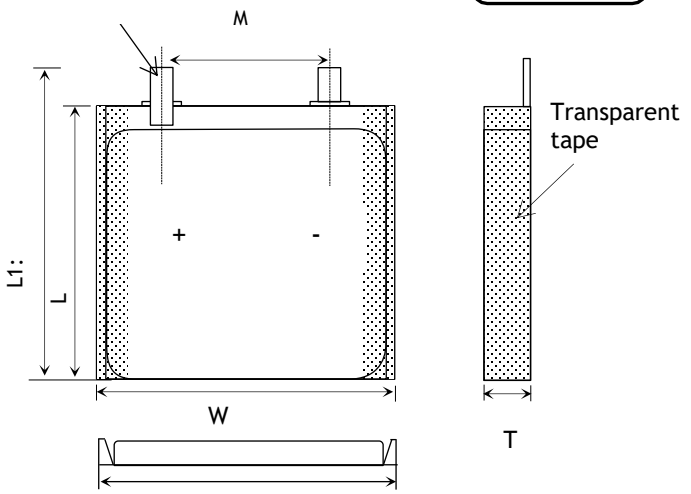

Item	Parameter (mm)
T	4
W	34
M	10
L	39
L_1	41
BL	41 ± 1
CL	100

ENVIRONMENTAL SPECIFICATIONS

Charging Temperature Range	0 - 45°C
Discharging Temperature Range	-20 - 60°C
Storage Period 1 Week	-20 - 45°C
Storage Period 1 Month	-10 - 45°C
Storage Period 6 Months	0 - 35°C

BATTERY PROTECTION

Over Charge	4.275 ± 50mV
Over Discharge	2.5V ± 50mV
Over Current	3A to 5A
Short Circuit	Yes

MECHANICAL SPECIFICATIONS

Dimensions	41x 34 x 4 mm(L*W*T)
Weight	Around 8 g
Battery Terminals	WC/ FL *

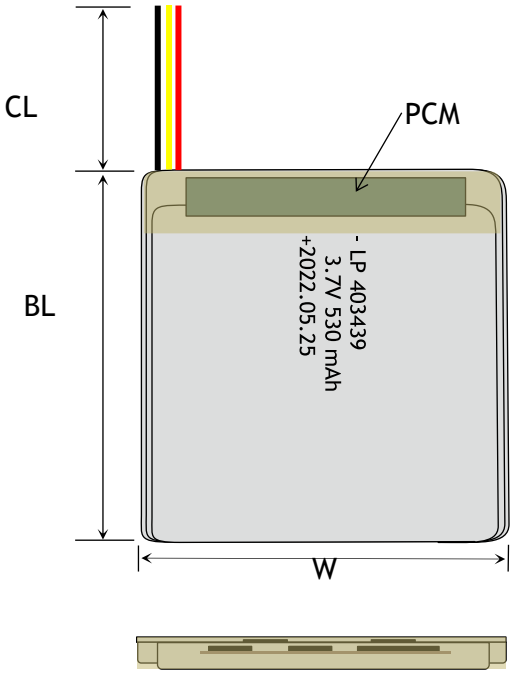

CERTIFICATION

Certification Approval	PLEASE CONSULT SALES

* aWC=With Connector FL=Flying Leads UWP=Blue Wrapped PVC
BWP=Black Wrapped PVC BC= Bare Cell

BULK PRODUCTION ACTUAL PICTURES



BARE CELL (BC)



FLYING LEADS (FL)



WITH CONNECTOR (WC)



BLUE WRAPPED PVC (UWP)



BLACK WRAPPED PVC (BWP)

3.7V LIPO BATTERY OPTIONS



Special Ingredients to make batteries work from -40 -85 ° C



Discharging Current up to 100C



Popular JST,Molex,Hirose,Anderson available



LED Power Indicator



Power Button



Upgrade to LifePo4 tech and life circle up to 1500

RELATIVE CURVES

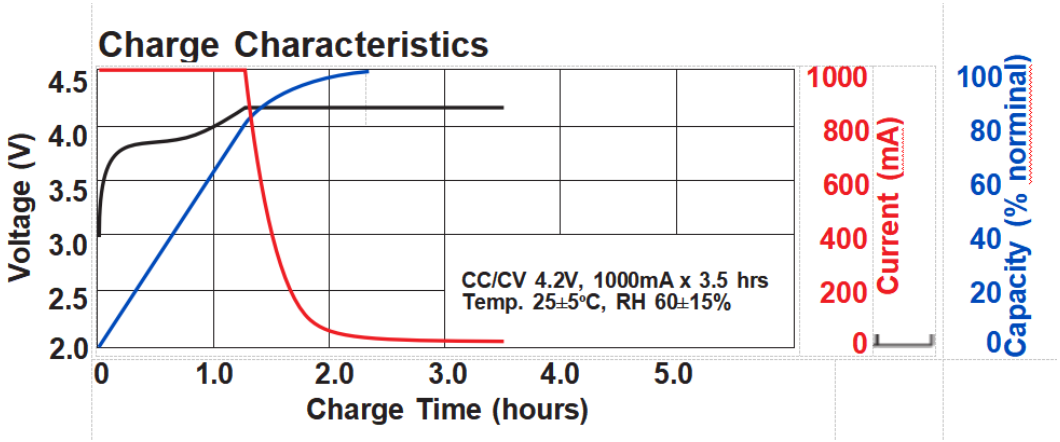

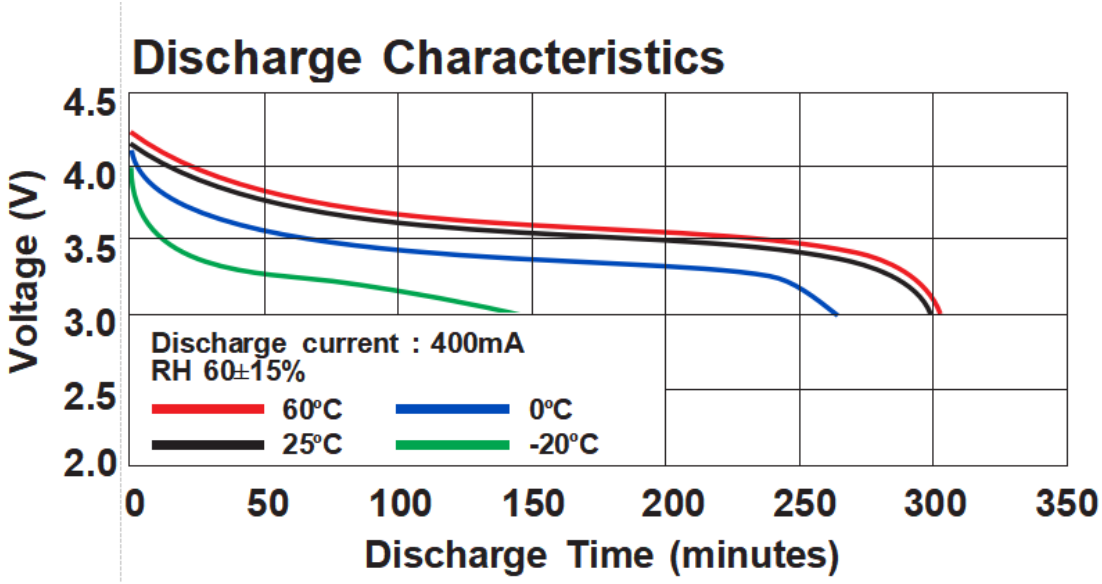

ANNOUNCEMENT

- Do not 'peak charge' or 'top off' Lipo batteries always remove Lipo batteries from a charger once they are charged.
- Store lithium batteries in a dedicated, vented fire-rated cabinet. Keep combustible materials clear of the cabinet. Label cabinet as containing lithium batteries.
- When connecting 2 packs in parallel always make sure they are from the same manufacturer, have the same capacity, are the same age and type and that there is a voltage difference of 0.03Votherwise the higher voltage pack will discharge into the lower voltage pack, which may cause a fire or less.
- Avoid physical damage and short circuiting.
- Protect from the frost, and also temperatures above 60 degrees Centigrade. Batteries should never be in the sun, on hot surfaces.
- If the battery becomes hot, smokes, or becomes abnormal, stop using it immediately.
- Charge at correct rate and proper voltage for either use or storage.
- Exercise caution with new products like E-Scooters where all safety considerations may not be recognized or that may encourage cheap knock-offs built without adherent to safety standards.
- Do not leave the battery in a hot vehicle interior.
- Discharging capacity can't exceed 80% of the max capacity after full charging to ensure a good cycle performance
- NEVER attempt to extinguish this type of fire yourself – portable fire extinguishers have proven to be ineffective in extinguishing Li-Ion and LiPo battery fires.