3.7V Lithium Polymer Battery Data Sheet

Model: 403068

Please Find More:

https://www.fpbattery.com/3-7v-5500mah-lithium-polymer-battery/

File Number: A/FP3068-20829

File Version: 01

CONTACT

CUSTOMER SERVICE
86.755.3682.7358
sales@fpbattery.com
Hours of Operation:
9:00am-6:00pm CST, Monday to Friday

LEARN MORE ON:
https://www.fpbattery.com/

DNK POWER COMPANY LIMITED

BATTERY SPECIFICATION

Part Number	DNK 403068
Nominal Voltage	3.7 V
Nominal Capacity	815 mAh
Internal Impedence	<60mΩ
Charge Voltage	4.2V
Recommended Charge Current	0.2 C
Allowed Max Charge Current	0.5 C
Output Voltage Range	4.2 - 2.5 V
Recommended Discharge Current	0.2 C
Max Continuous Discharge Current	1 C
Pulse Discharge Current	3 C (10 mS)
Discharge Cut-off Voltage	2.5± 0.05V
Cycle Life to 80% Health	500 (0.2C, 25°C)

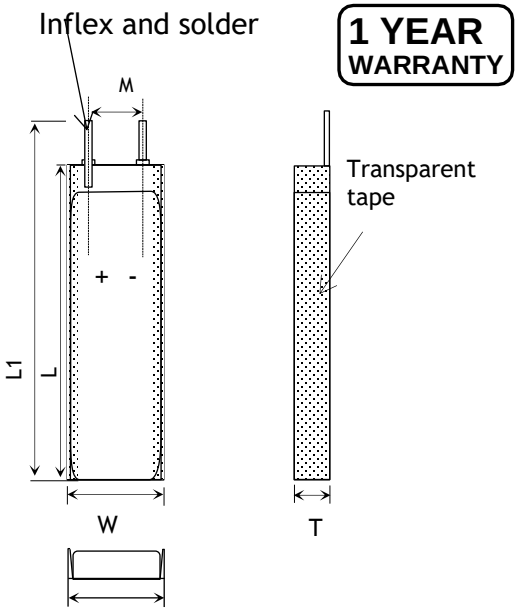

Item	Parameter (mm)
T	4
W	30
M	10
L	68
L_1	70
BL	70 ± 1
CL	100

ENVIRONMENTAL SPECIFICATIONS

Charging Temperature Range	0 - 45°C
Discharging Temperature Range	-20 - 60°C
Storage Period 1 Week	-20 - 45°C
Storage Period 1 Month	-10 - 45°C
Storage Period 6 Months	0 - 35°C

BATTERY PROTECTION

Over Charge	4.275 ± 50mV
Over Discharge	2.5V ± 50mV
Over Current	3A to 5A
Short Circuit	Yes

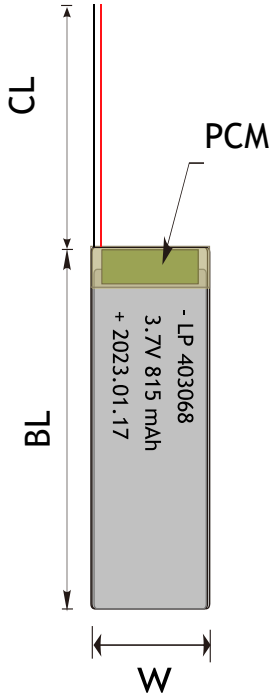

MECHANICAL SPECIFICATIONS

Dimensions	70x 30 x 4 mm(L*W*T)
Weight	13 g
Battery Terminals	WC/ FL *

CERTIFICATION

Certification Approval	PLEASE CONSULT SALES

* WC=With Connector FL=Flying Leads UWP=Blue Wrapped PVC BWP=Black Wrapped PVC BC= Bare Cell

BULK PRODUCTION ACTUAL PICTURES



BARE CELL (BC)



FLYING LEADS (FL)



WITH CONNECTOR (WC)



BLUE WRAPPED PVC (UWP)



BLACK WRAPPED PVC (BWP)

3.7V LIPO BATTERY OPTIONS

Special Ingredients to make batteries work from -40 -85 ° C

Discharging Current up to 100C

Popular JST,Molex,Hirose,Anderson available

LED Power Indicator

Power Button

Upgrade to LifePo4 tech and life circle up to 1500

RELATIVE CURVES

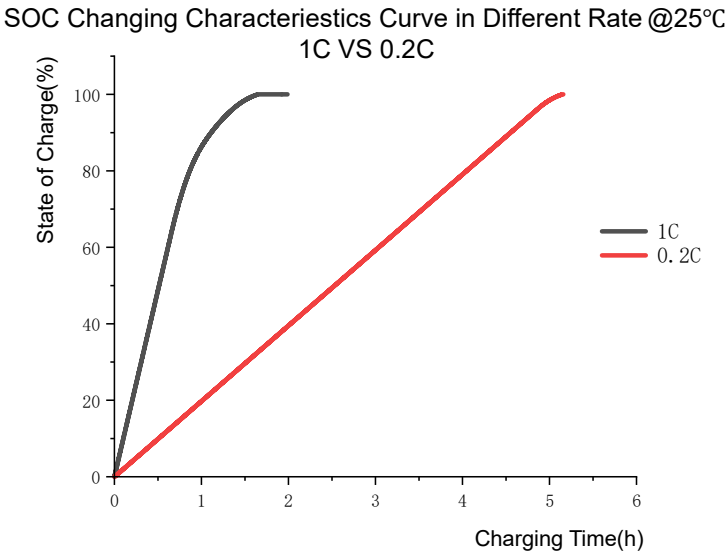

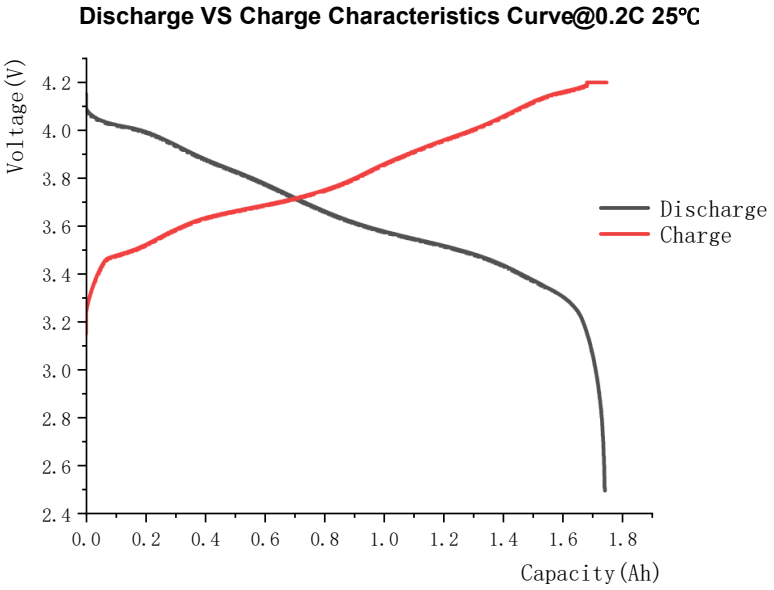

ANNOUNCEMENT

- Avoid excessively hot and humid conditions, especially when batteries are fully charged. Do not place batteries in direct sunlight, on hot surfaces or in hot locations.
- Always use the appropriate balancer/charger when charging your LiPo battery pack.
- Avoid using chargers with long charging times.
- Lithium-ion batteries assembled to offer higher voltages (over 60V) may present electrical shock and arc hazards. Therefore adherence to applicable electrical protection standards (terminal protection, shielding, PPE etc.) is required tAVOID exposure to electrical hazards.
- Do not leave cells un-attended when charging. Always remain close to the charging cells to constantly monitor the charging process and react to any potential problems should they occur.
- Avoid tightening the voltage adjustment knob on the way to use the battery.
- Avoid short-circuiting the battery. Though short-circuiting for short time will not damage the battery, doing so for a long time will damage the battery and may overheat the battery causing burns, fire or explosion.
- Always verify voltage of Batteries before use, this is especially important for packs that have been out of service for greater than six (months.
- Before starting work,make sure your Li-po batteries, chargers, and associated equipment are tested in accordance with an appropriate test standard (e.g., UL 2054), certified by a Nationally Recognized Testing Laboratory (NRTL), and rated for their intended uses.
- Always set the charger to proper cell count and/or voltage listed on Batteries' labels.
- Always follow the manufacturer's safety instructions