3.7V Lithium Polymer Battery Data Sheet

Model: 402862

Please Find More:

https://www.fpbattery.com/3-7v-650mah-lithium-polymer-battery/

File Number: A/FP2862-20579

File Version: 01

CONTACT

CUSTOMER SERVICE
86.755.3682.7358
sales@fpbattery.com
Hours of Operation:
9:00am-6:00pm CST, Monday to Friday

LEARN MORE ON:
https://www.fpbattery.com/

DNK POWER COMPANY LIMITED

BATTERY SPECIFICATION

Part Number	DNK 402862
Nominal Voltage	3.7 V
Nominal Capacity	695 mAh
Internal Impedence	<60mΩ
Charge Voltage	4.2V
Recommended Charge Current	0.2 C
Allowed Max Charge Current	0.5 C
Output Voltage Range	4.2 - 2.5 V
Recommended Discharge Current	0.2 C
Max Continuous Discharge Current	1 C
Pulse Discharge Current	3 C (10 mS)
Discharge Cut-off Voltage	2.5± 0.05V
Cycle Life to 80% Health	500 (0.2C, 25°C)

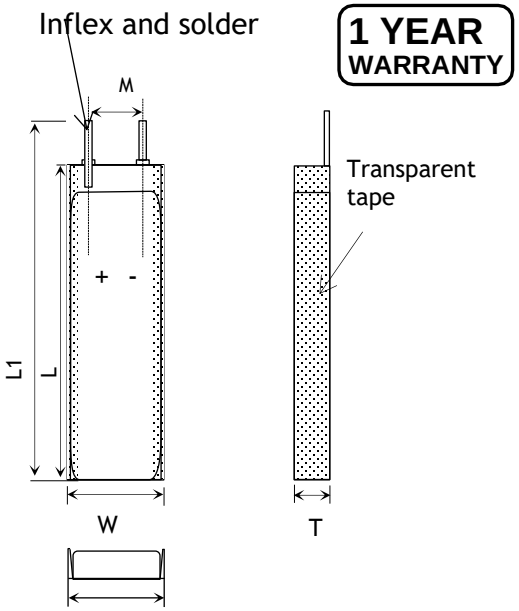

Item	Parameter (mm)
T	4
W	28
M	10
L	62
L_1	64
BL	64 ± 1
CL	100

ENVIRONMENTAL SPECIFICATIONS

Charging Temperature Range	0 - 45°C
Discharging Temperature Range	-20 - 60°C
Storage Period 1 Week	-20 - 45°C
Storage Period 1 Month	-10 - 45°C
Storage Period 6 Months	0 - 35°C

BATTERY PROTECTION

Over Charge	4.275 ± 50mV
Over Discharge	2.5V ± 50mV
Over Current	3A to 5A
Short Circuit	Yes

MECHANICAL SPECIFICATIONS

Dimensions	64x 28 x 4 mm(L*W*T)
Weight	11 g
Battery Terminals	WC/ FL *

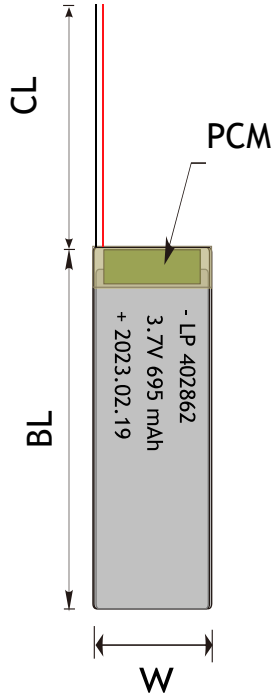

CERTIFICATION

Certification Approval	PLEASE CONSULT SALES

* WC=With Connector FL=Flying Leads UWP=Blue Wrapped PVC BWP=Black Wrapped PVC BC= Bare Cell

BULK PRODUCTION ACTUAL PICTURES



BARE CELL (BC)



FLYING LEADS (FL)



WITH CONNECTOR (WC)



BLUE WRAPPED PVC (UWP)



BLACK WRAPPED PVC (BWP)

3.7V LIPO BATTERY OPTIONS



Special Ingredients to make batteries work from -40 -85 ° C



Discharging Current up to 100C



Popular JST,Molex,Hirose,Anderson available



LED Power Indicator



Power Button



Upgrade to LifePo4 tech and life circle up to 1500

RELATIVE CURVES

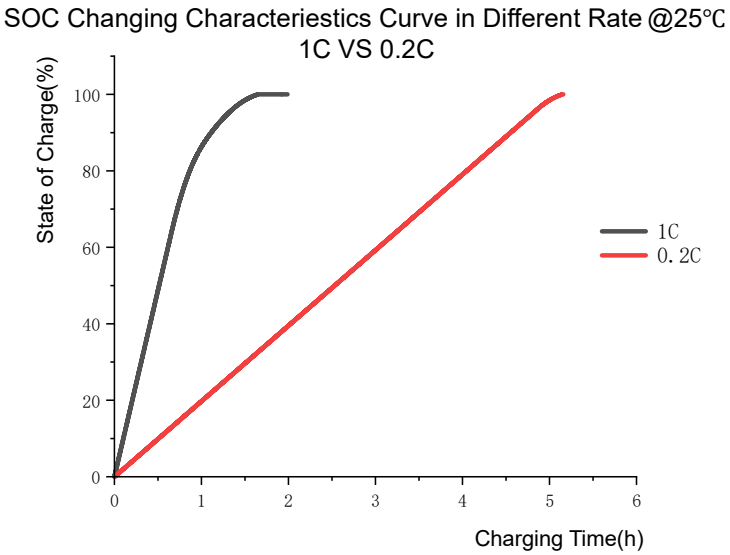

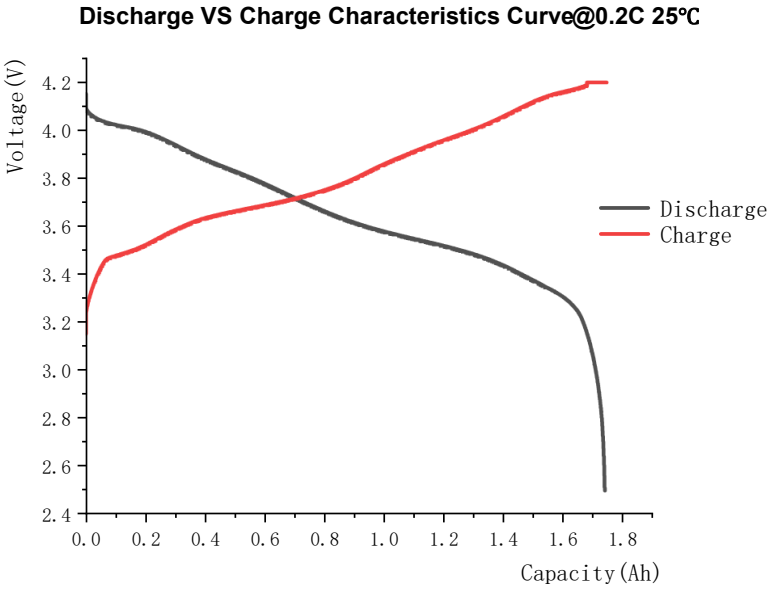

ANNOUNCEMENT

- Follow all safe operating guidelines and recommendations provided by the manufacturer.
- Always follow the manufacturer's safety instructions
- Check the voltage of your LiPo pack before charging with a digital multimeter. Only charge if it is 3.30V or greater per cell (e.g. 9.90V for a 3S pack).
- Avoid tightening the voltage adjustment knob on the way to use the battery.
- ALWAYS immediately disconnect the charging cord from the wall outlet if batteries or equipment develop heat/smoke, unusual odors, or show evidence of bulging (changes in shape or geometry).
- Avoid placing the battery in a damp environment.
- Use a dedicated lithium polymer battery charger and ensure that it meets the charging requirements of the battery.
- NEVER attempt to extinguish this type of fire yourself – portable fire extinguishers have proven to be ineffective in extinguishing Li-Ion and LiPo battery fires.
- Avoid prolonged exposure to high temperatures
- When using an adapter, select an output voltage and current that meets the needs of the battery.
- LiPo batteries must only be charged with a manufacturer recommended LiPo charger.