3.7V Lithium Polymer Battery Data Sheet

Model: 402850

Please Find More:

https://www.fpbattery.com/3-7v-500mah-lithium-polymer-battery/

File Number: A/FP2850-16733

File Version: 01

CONTACT

CUSTOMER SERVICE
86.755.3682.7358
sales@fpbattery.com
Hours of Operation:
9:00am-6:00pm CST, Monday to Friday

LEARN MORE ON:
https://www.fpbattery.com/

DNK POWER COMPANY LIMITED

BATTERY SPECIFICATION

Part Number	DNK 402850
Nominal Voltage	3.7 V
Nominal Capacity	560 mAh
Internal Impedence	<60mΩ
Charge Voltage	4.2V
Recommended Charge Current	0.2 C
Allowed Max Charge Current	0.5 C
Output Voltage Range	4.2 - 2.5 V
Recommended Discharge Current	0.2 C
Max Continuous Discharge Current	1 C
Pulse Discharge Current	3 C (10 mS)
Discharge Cut-off Voltage	2.5± 0.05V
Cycle Life to 80% Health	500 (0.2C, 25°C)

1

1 YEAR WARRANTY

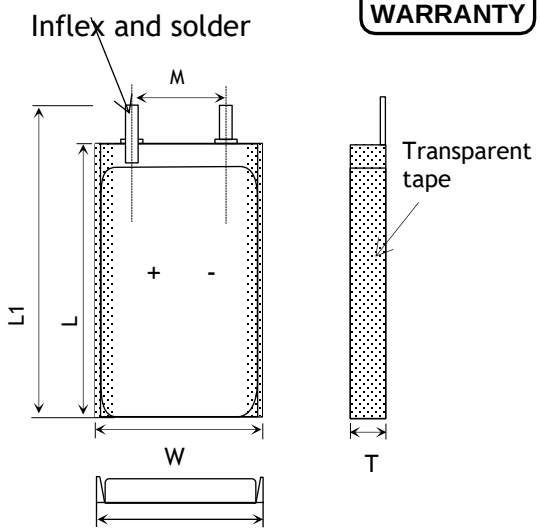

Item	Parameter (mm)
T	4
W	28
M	10
L	50
L_1	52
BL	52 ± 1
CL	100

ENVIRONMENTAL SPECIFICATIONS

Charging Temperature Range	0 - 45°C
Discharging Temperature Range	-20 - 60°C
Storage Period 1 Week	-20 - 45°C
Storage Period 1 Month	-10 - 45°C
Storage Period 6 Months	0 - 35°C

BATTERY PROTECTION

Over Charge	4.275 ± 50mV
Over Discharge	2.5V ± 50mV
Over Current	3A to 5A
Short Circuit	Yes

MECHANICAL SPECIFICATIONS

Dimensions	52x 28 x 4 mm(L*W*T)
Weight	9 g
Battery Terminals	WC/ FL *

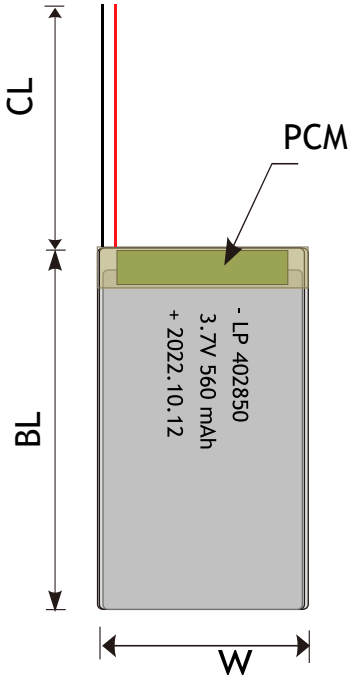

CERTIFICATION

Certification Approval	PLEASE CONSULT SALES

* WC=With Connector FL=Flying Leads UWP=Blue Wrapped PVC BWP=Black Wrapped PVC BC= Bare Cell

BULK PRODUCTION ACTUAL PICTURES



BARE CELL (BC)



FLYING LEADS (FL)



WITH CONNECTOR (WC)



BLUE WRAPPED PVC (UWP)



BLACK WRAPPED PVC (BWP)

3.7V LIPO BATTERY OPTIONS



Special Ingredients to make batteries work from -40 -85 ° C



Discharging Current up to 100C



Popular JST,Molex,Hirose,Anderson available



LED Power Indicator



Power Button



Upgrade to LifePo4 tech and life circle up to 1500

RELATIVE CURVES

SOC Changing Characteriestics Curve in Different Rate @25℃

1C VS 0.2C

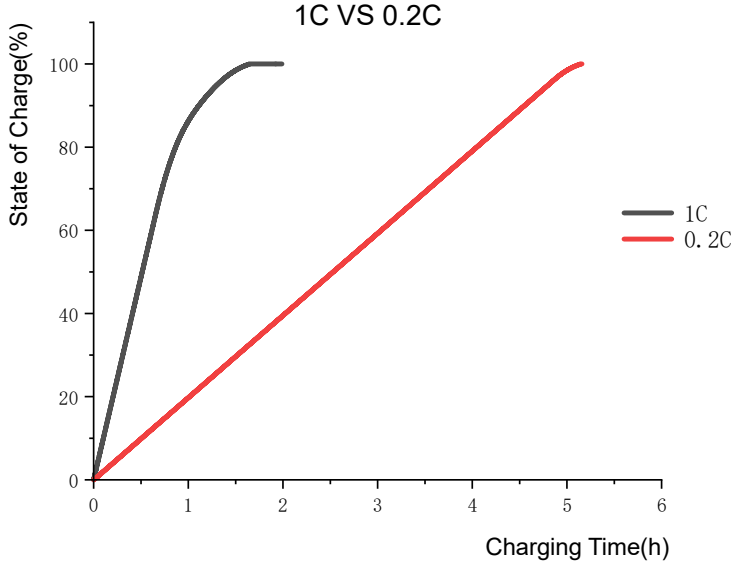

Charge & Discharge Characteriestics in different Rate@25℃

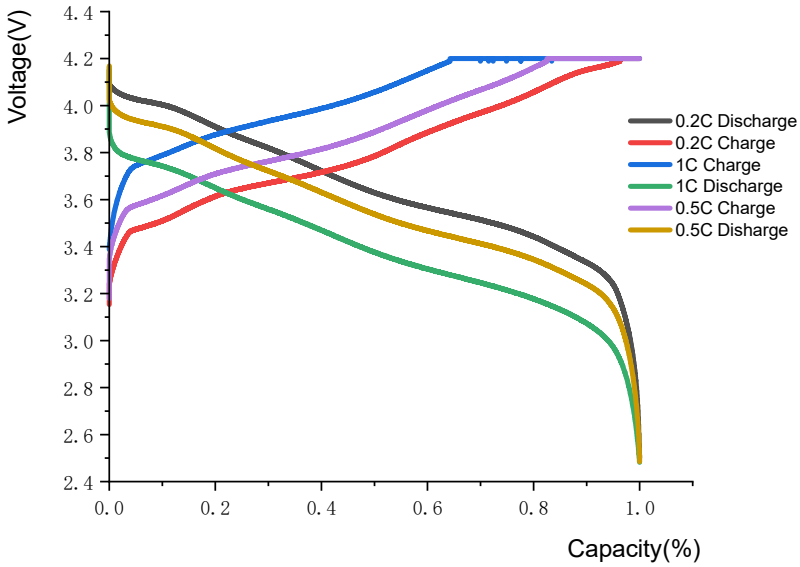

ANNOUNCEMENT

- Do not store batteries with metal.
- Contact EHRS if LiPo battery packs are to be fabricated in-house.
- Always use a balancer board to charge LiPo Battery with more than 1 cell.
- Discharge Lipo Battery at Environmental temperature : -20°C~60°C.
- Do not charge LiPo batteries in a vehicle or in the engine compartment of a vehicle.
- Store dust free and dry and protect from moisture
- Do not discharge the battery at a higher current than the maximum continuous discharging current. A higher discharging current may cause overheating which will lead to ballooning, swelling, or possibly result in fire. For example, a 5000mAh battery with a designed maximum 35C discharge current must not have a continuous discharge rate or load of more than 175 Amps. For longer cycle life, a continuous discharging current of 70%-80% of the designed maximum discharging current is acceptable and recommended.
- Misuse of a Lipo battery may result in the battery generating excessive heat, igniting or exploding. Keep batteries out of the reach of children.
- ALWAYS purchase and use batteries and devices that are listed or approved by a Nationally Recognized Testing Laboratory, such as Underwriter's Laboratories (UL) or Intertek (ETL).
- Always charge/store Batteries in a non-conductive, fire-proof container or bag.

- ALWAYS download a copy of the Safety Data Sheet (SDS) for the battery on the manufacturer's website or by contacting the manufacturer. Review and understand the hazards of the battery before storing, charging, or using.