3.7V Lithium Polymer Battery Data Sheet

Model: 402762

Please Find More:

https://www.fpbattery.com/3-7v-650mah-lithium-polymer-battery/

File Number: A/FP2762-21069

File Version: 01

CONTACT

CUSTOMER SERVICE
86.755.3682.7358
sales@fpbattery.com
Hours of Operation:
9:00am-6:00pm CST, Monday to Friday

LEARN MORE ON:
https://www.fpbattery.com/

DNK POWER COMPANY LIMITED

BATTERY SPECIFICATION

Part Number	DNK 402762
Nominal Voltage	3.7 V
Nominal Capacity	670 mAh
Internal Impedence	<60mΩ
Charge Voltage	4.2V
Recommended Charge Current	0.2 C
Allowed Max Charge Current	0.5 C
Output Voltage Range	4.2 - 2.5 V
Recommended Discharge Current	0.2 C
Max Continuous Discharge Current	1 C
Pulse Discharge Current	3 C (10 mS)
Discharge Cut-off Voltage	2.5± 0.05V
Cycle Life to 80% Health	500 (0.2C, 25°C)

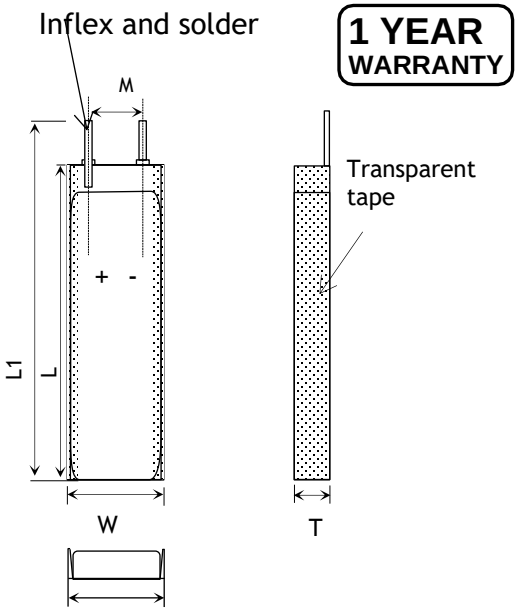

Item	Parameter (mm)
T	4
W	27
M	10
L	62
L_1	64
BL	64 ± 1
CL	100

ENVIRONMENTAL SPECIFICATIONS

Charging Temperature Range	0 - 45°C
Discharging Temperature Range	-20 - 60°C
Storage Period 1 Week	-20 - 45°C
Storage Period 1 Month	-10 - 45°C
Storage Period 6 Months	0 - 35°C

BATTERY PROTECTION

Over Charge	4.275 ± 50mV
Over Discharge	2.5V ± 50mV
Over Current	3A to 5A
Short Circuit	Yes

MECHANICAL SPECIFICATIONS

Dimensions	64x 27 x 4 mm(L*W*T)
Weight	11 g
Battery Terminals	WC/ FL *

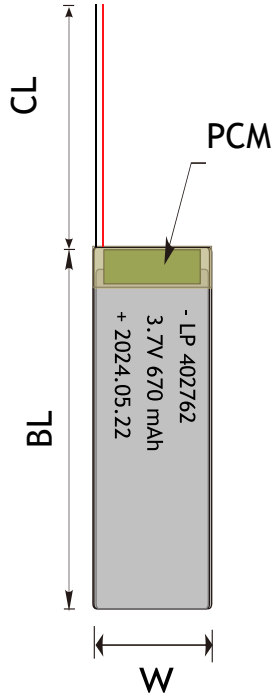

CERTIFICATION

Certification Approval	PLEASE CONSULT SALES

* WC=With Connector FL=Flying Leads UWP=Blue Wrapped PVC BWP=Black Wrapped PVC BC= Bare Cell

BULK PRODUCTION ACTUAL PICTURES



BARE CELL (BC)



FLYING LEADS (FL)



WITH CONNECTOR (WC)



BLUE WRAPPED PVC (UWP)



BLACK WRAPPED PVC (BWP)

3.7V LIPO BATTERY OPTIONS



Special Ingredients to make batteries work from -40 -85 ° C



Discharging Current up to 100C



Popular JST,Molex,Hirose,Anderson available



LED Power Indicator



Power Button



Upgrade to LifePo4 tech and life circle up to 1500

RELATIVE CURVES

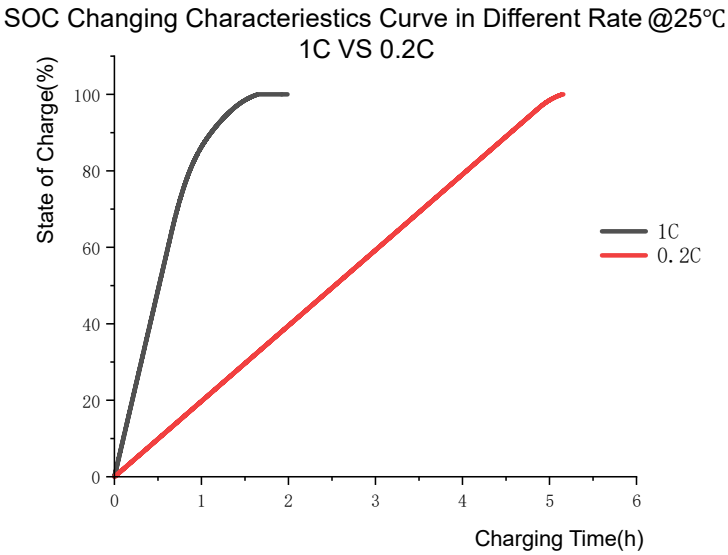

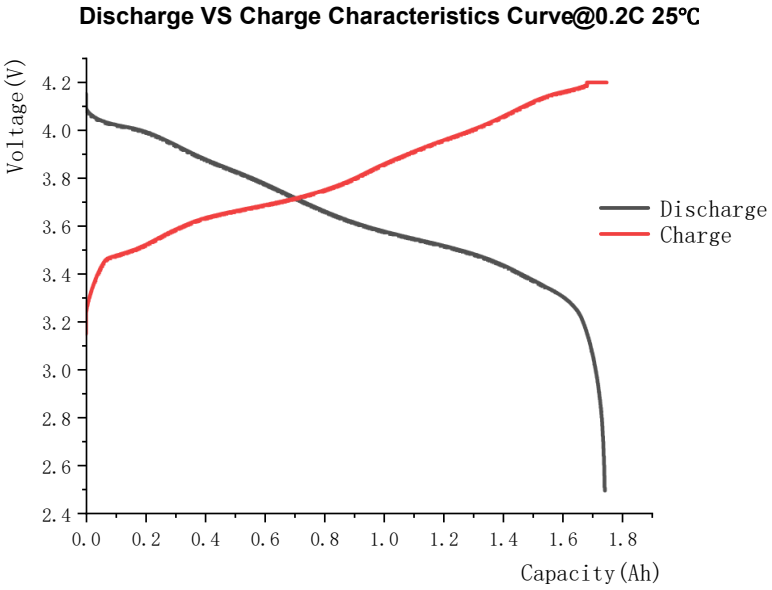

ANNOUNCEMENT

- Do not allow charging to continue above 4.20V per cell. This is VERY important as a fire could result.
- NEVER continue to charge a device or a battery after it is fully charged, unless the manufacturer's instructions for the charger and the battery specifically state that it is allowed.
- Do not apply sticky substances to the positive and negative terminals of the battery.
- NEVER put discarded batteries in piles.
- Do not vibrate the battery excessively.
- NEVER charge a Li-ion or LiPo battery overnight and unattended.
- When replacing batteries, make sure to use batteries of the same type, size and brand.
- All batteries should be stored, charged and used in accordance with the manufacturer's instructions.
- Although protective electronics built into the battery should prevent overcharging, such a battery management system can fail- for example if the charger is not suitable and thus unattended charging is always a source of danger.
- Do not put batteries in contact with conductive materials, water, seawater, strong oxidizers
- Charge at correct rate and proper voltage for either use or storage.