3.7V Lithium Polymer Battery Data Sheet

Model: 402550

Please Find More:

https://www.fpbattery.com/3-7v-500mah-lithium-polymer-battery/

File Number: A/FP2550-19228

File Version: 01

CONTACT

CUSTOMER SERVICE
86.755.3682.7358
sales@fpbattery.com
Hours of Operation:
9:00am-6:00pm CST, Monday to Friday

LEARN MORE ON:
https://www.fpbattery.com/

DNK POWER COMPANY LIMITED

BATTERY SPECIFICATION

Part Number	DNK 402550
Nominal Voltage	3.7 V
Nominal Capacity	500 mAh
Internal Impedence	<60mΩ
Charge Voltage	4.2V
Recommended Charge Current	0.2 C
Allowed Max Charge Current	0.5 C
Output Voltage Range	4.2 - 2.5 V
Recommended Discharge Current	0.2 C
Max Continuous Discharge Current	1 C
Pulse Discharge Current	3 C (10 mS)
Discharge Cut-off Voltage	2.5± 0.05V
Cycle Life to 80% Health	500 (0.2C, 25°C)

1

ENVIRONMENTAL SPECIFICATIONS

Charging Temperature Range	0 - 45°C
Discharging Temperature Range	-20 - 60°C
Storage Period 1 Week	-20 - 45°C
Storage Period 1 Month	-10 - 45°C
Storage Period 6 Months	0 - 35°C

BATTERY PROTECTION

Over Charge	4.275 ± 50mV
Over Discharge	2.5V ± 50mV
Over Current	3A to 5A
Short Circuit	Yes

MECHANICAL SPECIFICATIONS

Dimensions	52x 25 x 4 mm(L*W*T)
Weight	Around 8 g
Battery Terminals	WC/ FL *

CERTIFICATION

Certification Approval	PLEASE CONSULT SALES

* WC=With Connector FL=Flying Leads UWP=Blue Wrapped PVC BWP=Black Wrapped PVC BC= Bare Cell

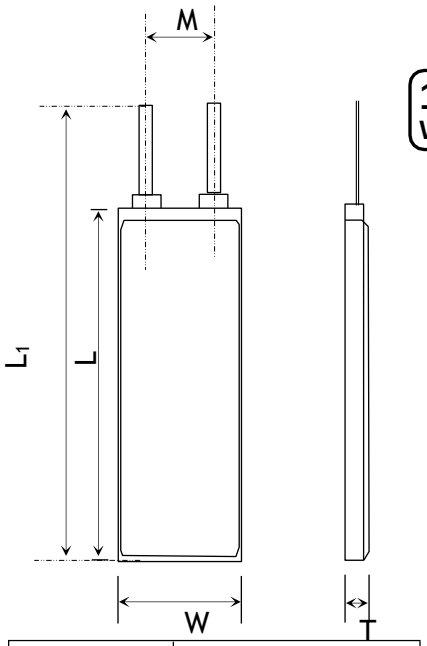

1 YEAR WARRANTY

Item	Parameter (mm)
T	4
W	25
M	10
L	50
L_1	52
BL	52 ± 1
CL	100

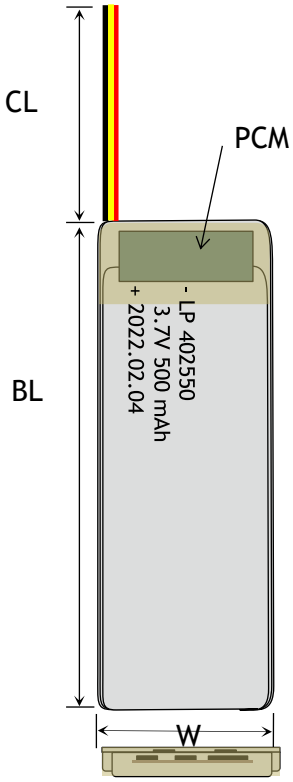

BULK PRODUCTION ACTUAL PICTURES



BARE CELL (BC)



FLYING LEADS (FL)



WITH CONNECTOR (WC)



BLUE WRAPPED PVC (UWP)



BLACK WRAPPED PVC (BWP)

3.7V LIPO BATTERY OPTIONS

Special Ingredients to make batteries work from -40 -85 ° C

Discharging Current up to 100C

Popular JST,Molex,Hirose,Anderson available

LED Power Indicator

Power Button

Upgrade to LifePo4 tech and life circle up to 1500

RELATIVE CURVES

Charge & Discharge Characteriestics in different Rate@25℃

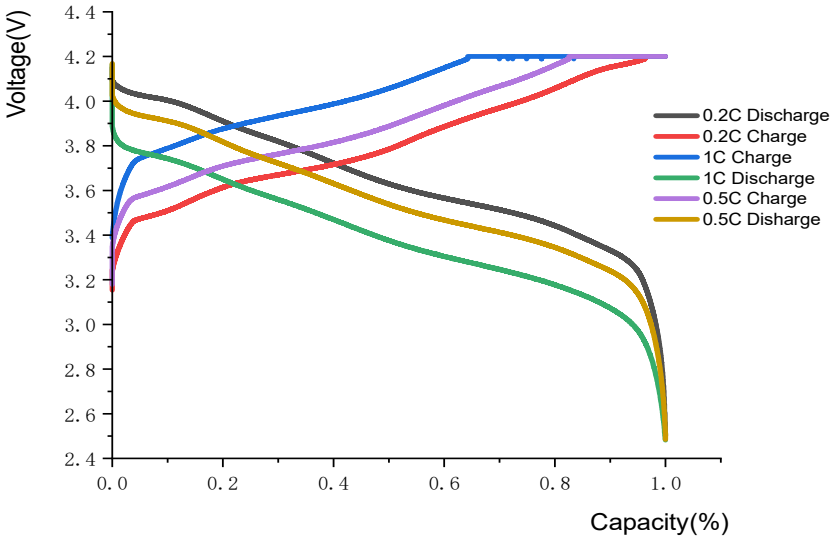

0.2C Discharging Characteriestics Curve@25℃

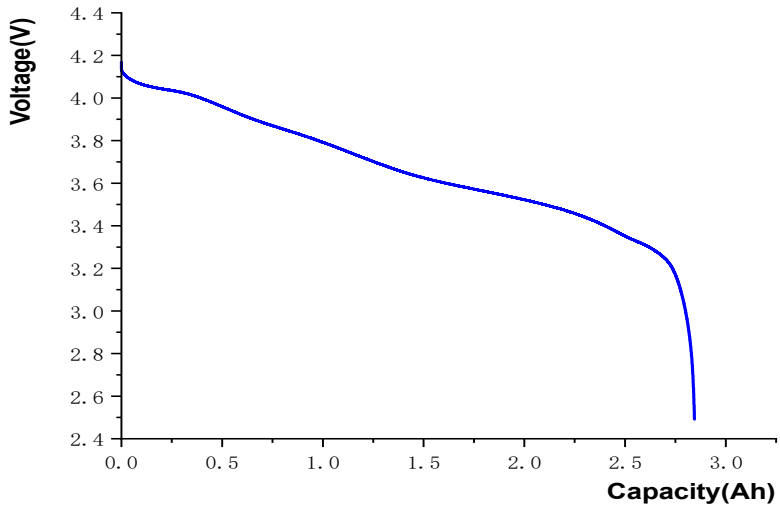

ANNOUNCEMENT

- Charge only with an approved LiPo charger, according to the parameters for the particular battery
- If you start seeing any physical changes to the battery while discharging example puffing, STOP charging immediately and dispose of the battery responsibly.
- Only charge in an isolated area away from other flammable materials and on a non conductive and non flammable surface. Use a fireproof container. LiPo battery fires can not be extinguished. If a fire occurs, contain it by covering it with a fire blanket until it burns itself out.
- NEVER extinguish LiPo batteries with water.
- Always charge/store Batteries in a non-conductive, fire-proof container or bag.
- Never discharge your Li-Po battery below the Lowest Discharge Voltage. This may cause irreversible damage which will deteriorate battery performance and cycle life. An ESC with an adjustable low voltage cutoff is MANDATORY!
- Always use the appropriate balancer/charger when charging your LiPo battery pack.
- Do not use damaged battery connectors.
- ALWAYS locate exits and evacuation routes in your area. Know the location of portable fire extinguishers in the area, and the location of the nearest fire alarm pull station (if the building is equipped with a fire alarm system).
- Never charge a battery that is still warm after usage, and never use a battery that is still warm from charging.
- Do not submit to static electricity risks tAVOID damages to the Protecting Circuit Board.