3.7V Lithium Polymer Battery Data Sheet

Model: 393658

Please Find More:

https://www.fpbattery.com/3-7v-900mah-lithium-polymer-battery/

File Number: A/FP3658-14186

File Version: 01

CONTACT

CUSTOMER SERVICE
86.755.3682.7358
sales@fpbattery.com
Hours of Operation:
9:00am-6:00pm CST, Monday to Friday

LEARN MORE ON:
https://www.fpbattery.com/

DNK POWER COMPANY LIMITED

BATTERY SPECIFICATION

Part Number	DNK 393658
Nominal Voltage	3.7 V
Nominal Capacity	900 mAh
Internal Impedence	<60mΩ
Charge Voltage	4.2V
Recommended Charge Current	0.2 C
Allowed Max Charge Current	0.5 C
Output Voltage Range	4.2 - 2.5 V
Recommended Discharge Current	0.2 C
Max Continuous Discharge Current	1 C
Pulse Discharge Current	3 C (10 mS)
Discharge Cut-off Voltage	2.5± 0.05V
Cycle Life to 80% Health	500 (0.2C, 25°C)

1

1 YEAR WARRANTY

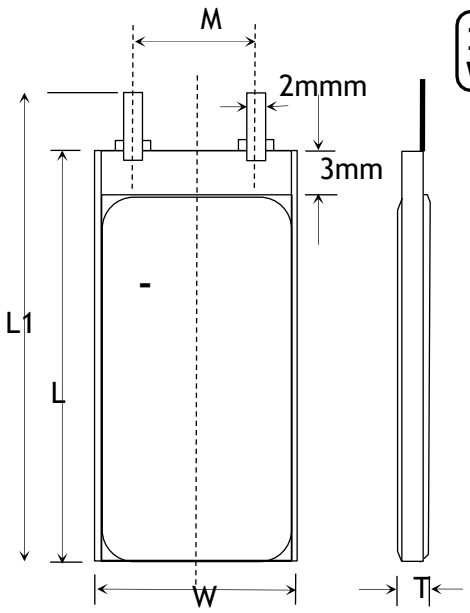

Item	Parameter (mm)
T	3
W	36
M	10
L	58
L_1	60
BL	60 ± 1
CL	100

ENVIRONMENTAL SPECIFICATIONS

Charging Temperature Range	0 - 45°C
Discharging Temperature Range	-20 - 60°C
Storage Period 1 Week	-20 - 45°C
Storage Period 1 Month	-10 - 45°C
Storage Period 6 Months	0 - 35°C

BATTERY PROTECTION

Over Charge	4.275 ± 50mV
Over Discharge	2.5V ± 50mV
Over Current	3A to 5A
Short Circuit	Yes

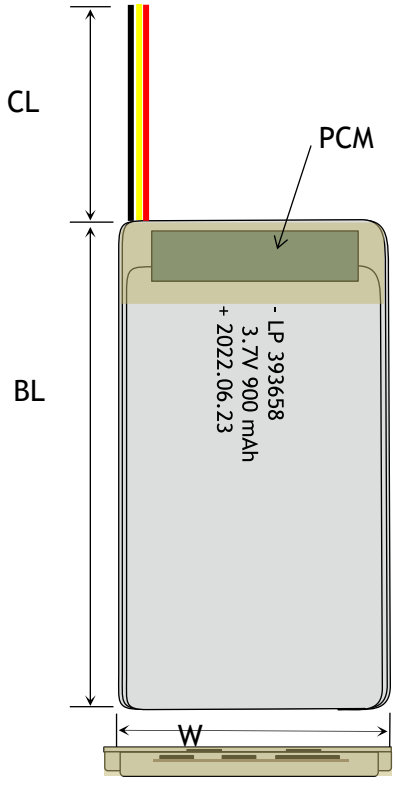

MECHANICAL SPECIFICATIONS

Dimensions	60x 36 x 3 mm(L*W*T)
Weight	Around 15 g
Battery Terminals	WC/ FL *

CERTIFICATION

Certification Approval	PLEASE CONSULT SALES

* WC=With Connector FL=Flying Leads UWP=Blue Wrapped PVC BWP=Black Wrapped PVC BC= Bare Cell

RELATIVE CURVES

0.2C Discharge Characteristics Curve

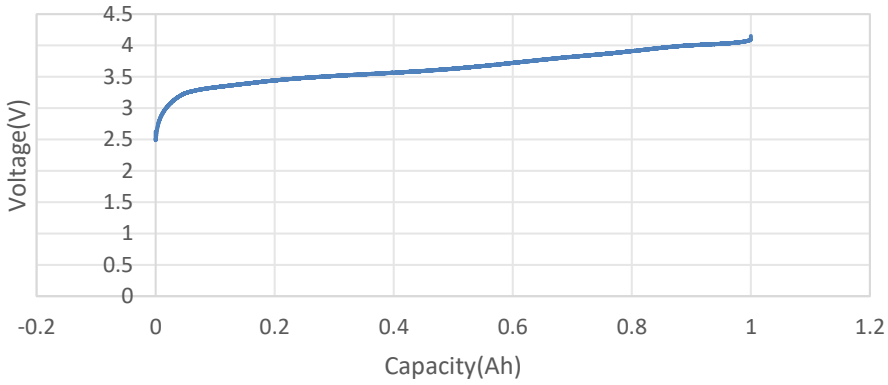

1C Discharge Characteristics Curves

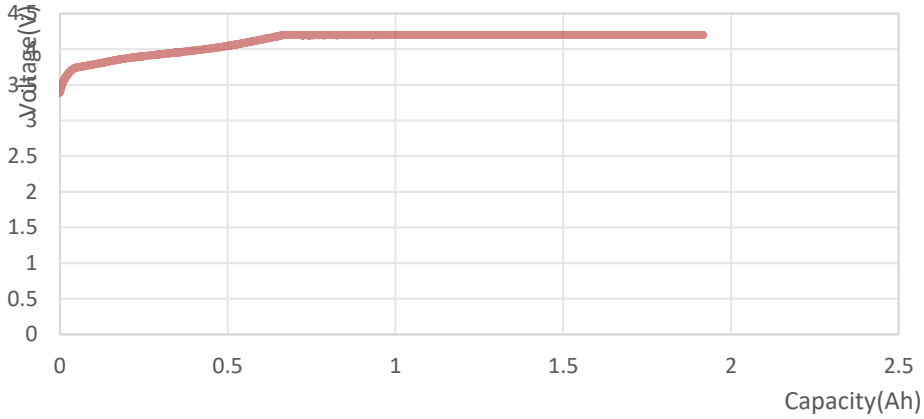

ANNOUNCEMENT

- A 5s4p battery pack means that the pack contains 5 cells in a series circuit and 4 cells in a parallel circuit. Since each cell is 3.7v (nominal) a 5s LiPo battery has a nominal voltage of 18.5V, a fully charged voltage of 21.0V and a maximum discharged voltage of 15.0V before damage occurs.
- When replacing batteries, make sure to use batteries of the same type, size and brand.
- Connecting the LiPo Battery to the Charger (Read the Charger Instructions)
- Store lithium batteries in a dedicated, vented fire-rated cabinet. Keep combustible materials clear of the cabinet. Label cabinet as containing lithium batteries.
- Test equipment for short circuits prior to installing batteries.
- Avoid using charging methods other than wireless chargers.
- The battery and all electrical connections must be protected against splashing liquids. Electrical cables and connectors must be protected against accidental tearing.
- Do not use a battery that has been over-discharged.
- If the battery swells during charging, stop charging immediately and disconnect the battery from the charger. Leave the battery outside for a few hours and observe.
- Do not place the battery near flammable materials.
- Contact EHRS if LiPo battery packs are to be fabricated in-house.