3.7V Lithium Polymer Battery Data Sheet

Model: 356873

Please Find More:

https://www.fpbattery.com/3-7v-1700mah-lithium-polymer-battery/

File Number: A/FP6873-3524

File Version: 01

CONTACT

CUSTOMER SERVICE
86.755.3682.7358
sales@fpbattery.com
Hours of Operation:
9:00am-6:00pm CST, Monday to Friday

LEARN MORE ON:
https://www.fpbattery.com/

DNK POWER COMPANY LIMITED

BATTERY SPECIFICATION

Part Number	DNK 356873
Nominal Voltage	3.7 V
Nominal Capacity	1700 mAh
Internal Impedence	<60mΩ
Charge Voltage	4.2V
Recommended Charge Current	0.2 C
Allowed Max Charge Current	0.5 C
Output Voltage Range	4.2 - 2.5 V
Recommended Discharge Current	0.2 C
Max Continuous Discharge Current	1 C
Pulse Discharge Current	3 C (10 mS)
Discharge Cut-off Voltage	2.5± 0.05V
Cycle Life to 80% Health	500 (0.2C, 25°C)

1

1 YEAR WARRANTY

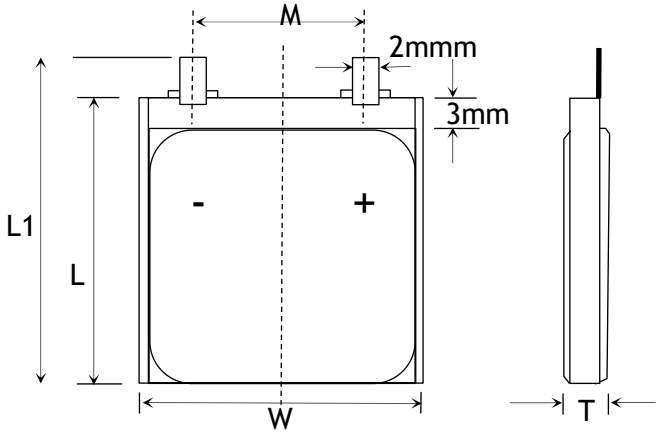

Item	Parameter (mm)
T	3
W	68
M	10
L	73
L_1	75
BL	75 ± 1
CL	100

ENVIRONMENTAL SPECIFICATIONS

Charging Temperature Range	0 - 45°C
Discharging Temperature Range	-20 - 60°C
Storage Period 1 Week	-20 - 45°C
Storage Period 1 Month	-10 - 45°C
Storage Period 6 Months	0 - 35°C

BATTERY PROTECTION

Over Charge	4.275 ± 50mV
Over Discharge	2.5V ± 50mV
Over Current	3A to 5A
Short Circuit	Yes

MECHANICAL SPECIFICATIONS

Dimensions	75x 68 x 3 mm(L*W*T)
Weight	Around 28 g
Battery Terminals	WC/ FL *

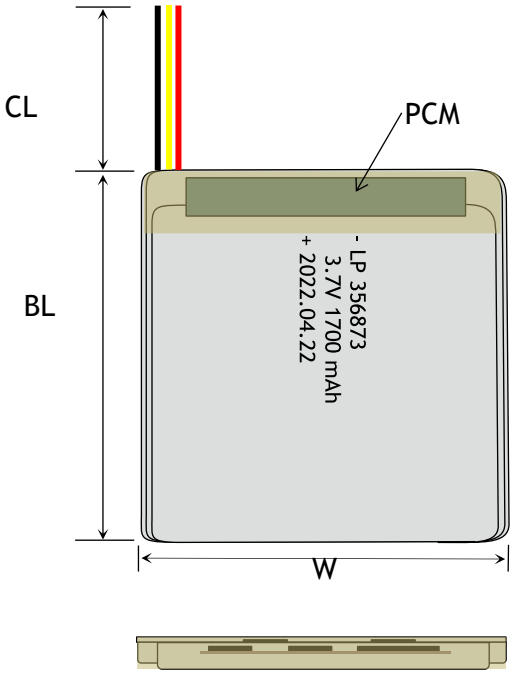

CERTIFICATION

Certification Approval	PLEASE CONSULT SALES

* WC=With Connector FL=Flying Leads UWP=Blue Wrapped PVC
BWP=Black Wrapped PVC BC= Bare Cell

BULK PRODUCTION ACTUAL PICTURES



BARE CELL (BC)



FLYING LEADS (FL)



WITH CONNECTOR (WC)



BLUE WRAPPED PVC (UWP)



BLACK WRAPPED PVC (BWP)

3.7V LIPO BATTERY OPTIONS



Special Ingredients to make batteries work from -40 -85 ° C



Discharging Current up to 100C



Popular JST,Molex,Hirose,Anderson available



LED Power Indicator



Power Button



Upgrade to LifePo4 tech and life circle up to 1500

RELATIVE CURVES

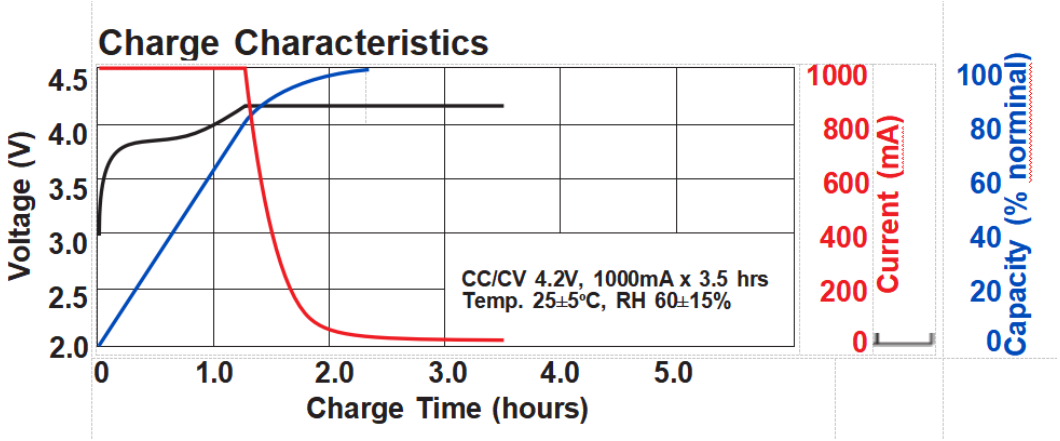

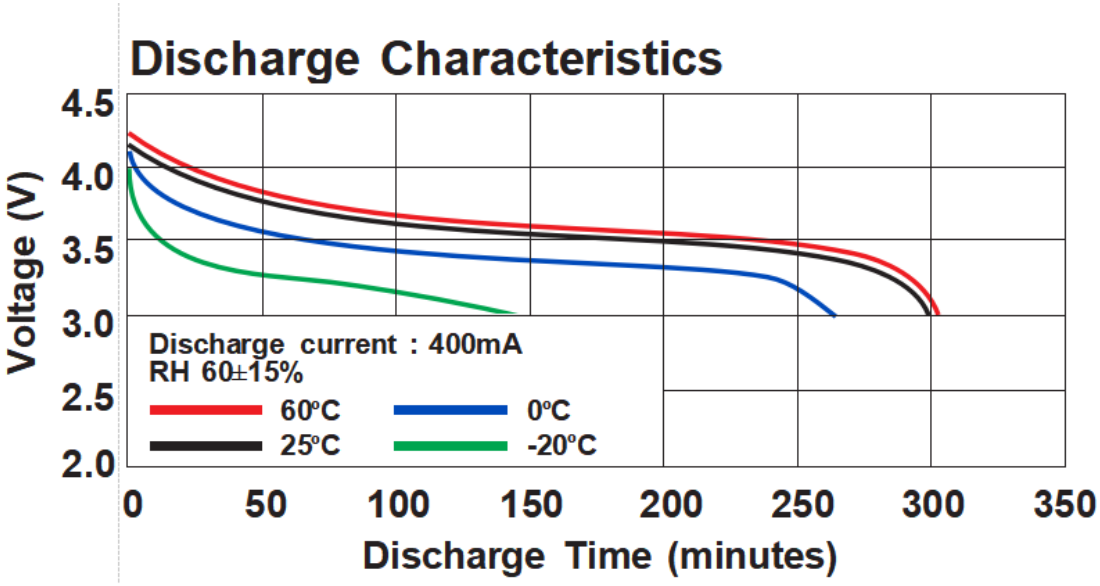

ANNOUNCEMENT

- Do not store or use the battery with objects that could cause a short circuit such as coins, metal objects etc.
- Always charge/store Batteries in a non-conductive, fire-proof container or bag.
- Avoid using unauthorized charging devices.
- Never charge a LiPo battery while inside your model.
- Always disconnect and remove LiPo batteries from your model when not in use. Store LiPo batteries in an airtight and flame-resistant container when not in use.
- Do not charge LiPo batteries in the model as you can not successfully monitor and move them quickly if necessary.
- Protect from the frost, and also temperatures above 60 degrees Centigrade. Batteries should never be in the sun, on hot surfaces.
- NEVER charge batteries at temperatures below 32℉ (0℃) or above 105℉ (40℃).
- Avoid crushing or excessive pressure on the battery.
- In premises that also provide sleeping accommodation, serious consideration should be given, wherever practicable, to using timers to control socket outlets used for charging equipment
- Do not inhale the smoke/fumes of a LiPo battery that is on fire. The smoke is toxic. Leave the area and call 911.