3.7V Lithium Polymer Battery Data Sheet

Model: 356470

Please Find More:

https://www.fpbattery.com/3-7v-1600mah-lithium-polymer-battery/

File Number: A/FP6470-4090

File Version: 01

CONTACT

CUSTOMER SERVICE
86.755.3682.7358
sales@fpbattery.com
Hours of Operation:
9:00am-6:00pm CST, Monday to Friday

LEARN MORE ON:
https://www.fpbattery.com/

DNK POWER COMPANY LIMITED

BATTERY SPECIFICATION

Part Number	DNK 356470
Nominal Voltage	3.7 V
Nominal Capacity	1600 mAh
Internal Impedence	<60mΩ
Charge Voltage	4.2V
Recommended Charge Current	0.2 C
Allowed Max Charge Current	0.5 C
Output Voltage Range	4.2 - 2.5 V
Recommended Discharge Current	0.2 C
Max Continuous Discharge Current	1 C
Pulse Discharge Current	3 C (10 mS)
Discharge Cut-off Voltage	2.5± 0.05V
Cycle Life to 80% Health	500 (0.2C, 25°C)

1

1 YEAR WARRANTY

Inflex and soler

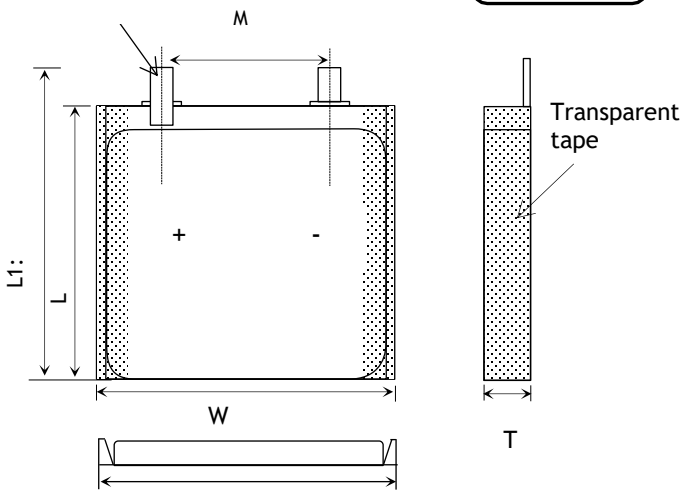

Item	Parameter (mm)
T	3
W	64
M	10
L	70
L_1	72
BL	72 ± 1
CL	100

ENVIRONMENTAL SPECIFICATIONS

Charging Temperature Range	0 - 45°C
Discharging Temperature Range	-20 - 60°C
Storage Period 1 Week	-20 - 45°C
Storage Period 1 Month	-10 - 45°C
Storage Period 6 Months	0 - 35°C

BATTERY PROTECTION

Over Charge	4.275 ± 50mV
Over Discharge	2.5V ± 50mV
Over Current	3A to 5A
Short Circuit	Yes

MECHANICAL SPECIFICATIONS

Dimensions	72x 64 x 3 mm(L*W*T)
Weight	Around 26 g
Battery Terminals	WC/ FL *

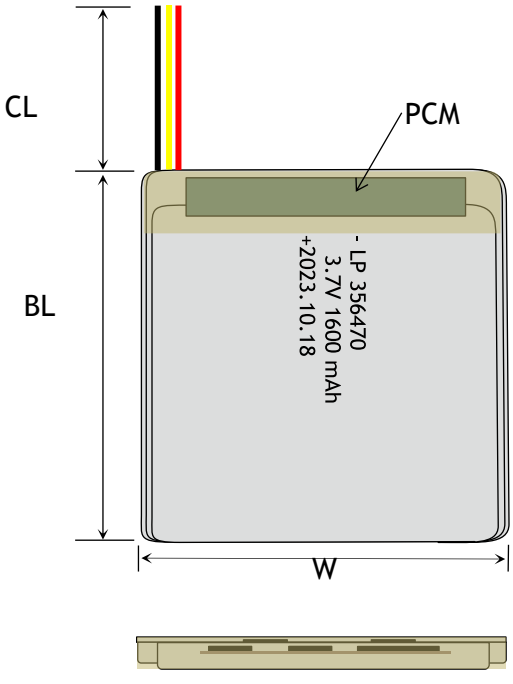

CERTIFICATION

Certification Approval	PLEASE CONSULT SALES

* aWC=With Connector FL=Flying Leads UWP=Blue Wrapped PVC
BWP=Black Wrapped PVC BC= Bare Cell

BULK PRODUCTION ACTUAL PICTURES



BARE CELL (BC)



FLYING LEADS (FL)



WITH CONNECTOR (WC)



BLUE WRAPPED PVC (UWP)



BLACK WRAPPED PVC (BWP)

3.7V LIPO BATTERY OPTIONS



Special Ingredients to make batteries work from -40 -85 ° C



Discharging Current up to 100C



Popular JST,Molex,Hirose,Anderson available



LED Power Indicator



Power Button



Upgrade to LifePo4 tech and life circle up to 1500

RELATIVE CURVES

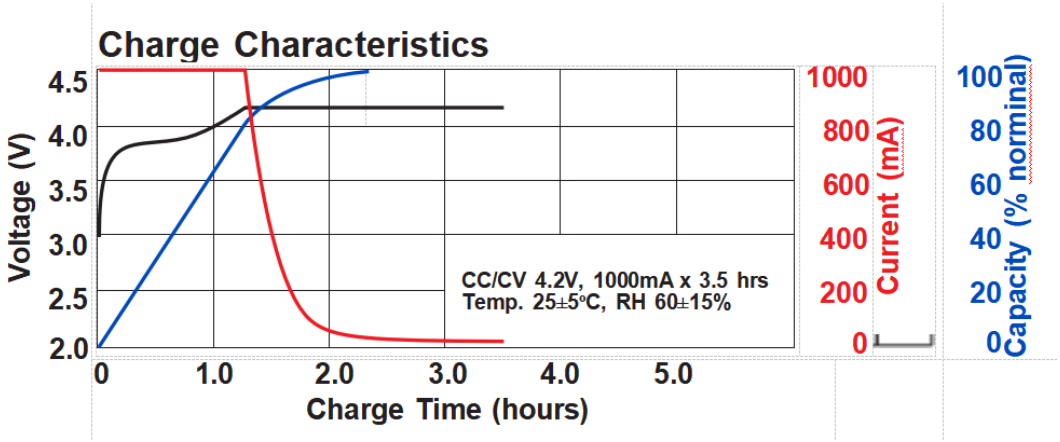

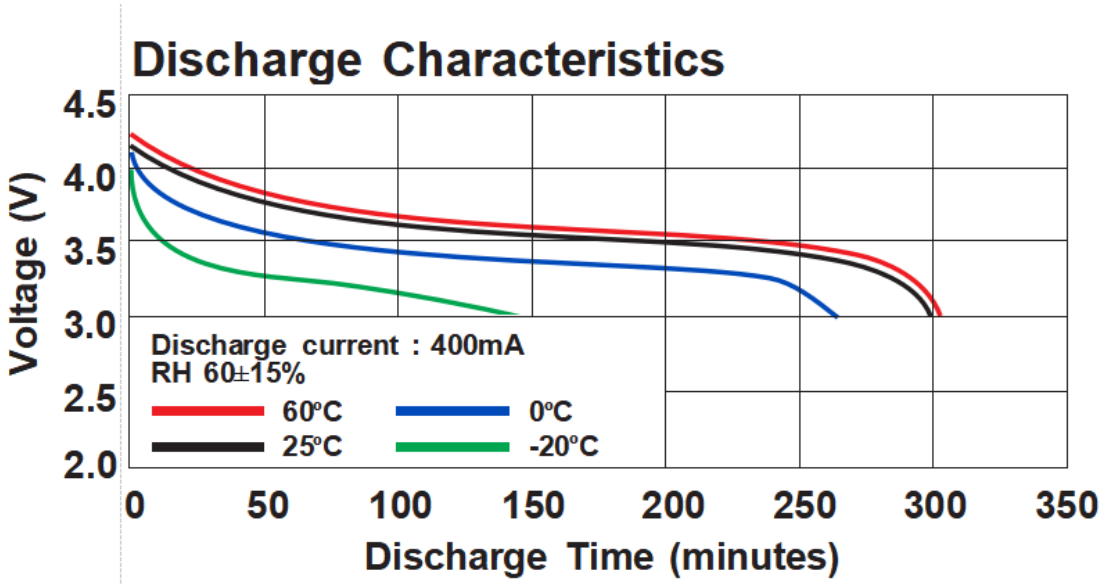

ANNOUNCEMENT

- Never charge Batteries that are too hot to the touch (above 100° F). DO NOT handle Batteries until they are cool.
- Avoid purchasing low quality batteries to avoid accidents.
- Always use a balancer board to charge LiPo Battery with more than 1 cell.
- For best practice store standard lipo batteries at 3.80 volts +/.05 volts per cell. Or at the manufacturer's suggested storage voltage for non standard chemistry's
- Pay attention to the positive and negative connections of the battery to ensure proper connection.
- Although protective electronics built into the battery should prevent overcharging, such a battery management system can fail– for example if the charger is not suitable and thus unattended charging is always a source of danger.
- Do not throw the battery in a fire.
- Dispose of defective Lipos in accordance with local ordinances and in a safe manner.
- Clean the battery connectors regularly to maintain good contact performance.
- Short circuits may cause fire and injury! If you plan to cut the battery’s terminal wires, you must cut each wire individually, making sure the wires not to touch each other. Otherwise, a short circuit may occur and potentially cause a fire. If you accidentally cause the battery to short circuit, place it in a safe space and observe it for at least 15 minutes. The battery may swell or possibly catch fire during this time. Additionally, the powerful electric current may cause severe injuries if the battery leads come in contact with rings or jewelry. Dispose of used or damaged LiPo batteries at your local Hazardous Waste Facility or Recycling Center.

- NEVER leave E-bikes or other similar personal mobility devices unattended while charging.