3.7V Lithium Polymer Battery Data Sheet

Model: 356387

Please Find More:

https://www.fpbattery.com/3-7v-1800mah-lithium-polymer-battery/

File Number: A/FP6387-10065

File Version: 01

CONTACT

CUSTOMER SERVICE
86.755.3682.7358
sales@fpbattery.com
Hours of Operation:
9:00am-6:00pm CST, Monday to Friday

LEARN MORE ON:
https://www.fpbattery.com/

DNK POWER COMPANY LIMITED

BATTERY SPECIFICATION

Part Number	DNK 356387
Nominal Voltage	3.7 V
Nominal Capacity	1900 mAh
Internal Impedence	<60mΩ
Charge Voltage	4.2V
Recommended Charge Current	0.2 C
Allowed Max Charge Current	0.5 C
Output Voltage Range	4.2 - 2.5 V
Recommended Discharge Current	0.2 C
Max Continuous Discharge Current	1 C
Pulse Discharge Current	3 C (10 mS)
Discharge Cut-off Voltage	2.5± 0.05V
Cycle Life to 80% Health	500 (0.2C, 25°C)

1

ENVIRONMENTAL SPECIFICATIONS

Charging Temperature Range	0 - 45°C
Discharging Temperature Range	-20 - 60°C
Storage Period 1 Week	-20 - 45°C
Storage Period 1 Month	-10 - 45°C
Storage Period 6 Months	0 - 35°C

BATTERY PROTECTION

Over Charge	4.275 ± 50mV
Over Discharge	2.5V ± 50mV
Over Current	3A to 5A
Short Circuit	Yes

MECHANICAL SPECIFICATIONS

Dimensions	89x 63 x 3 mm(L*W*T)
Weight	Around 31 g
Battery Terminals	WC/ FL *

CERTIFICATION

Certification Approval	PLEASE CONSULT SALES

* WC=With Connector FL=Flying Leads UWP=Blue Wrapped PVC BWP=Black Wrapped PVC BC= Bare Cell

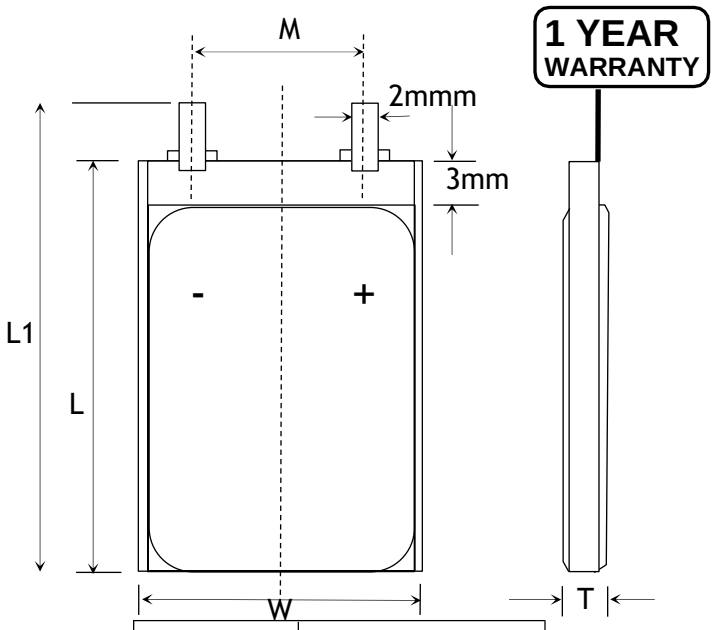

Item	Parameter (mm)
T	3
W	63
M	10
L	87
L_1	89
BL	89 ± 1
CL	100

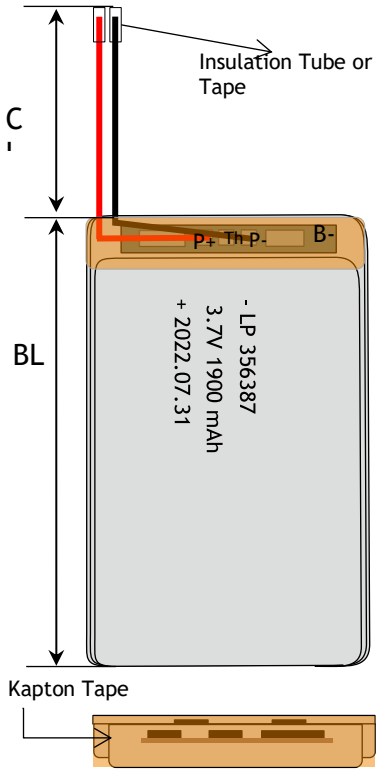

RELATIVE CURVES

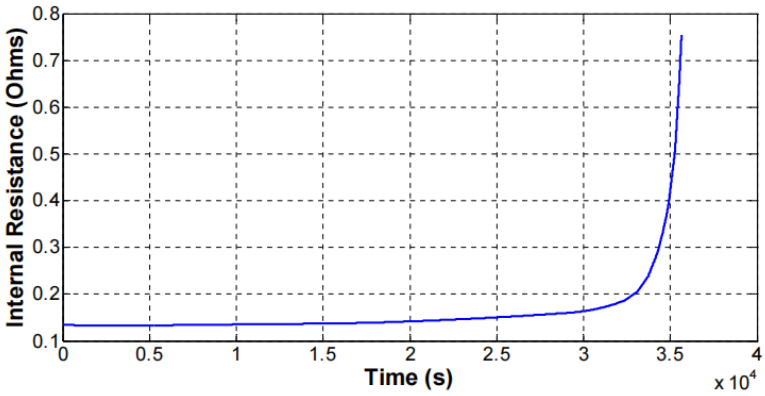

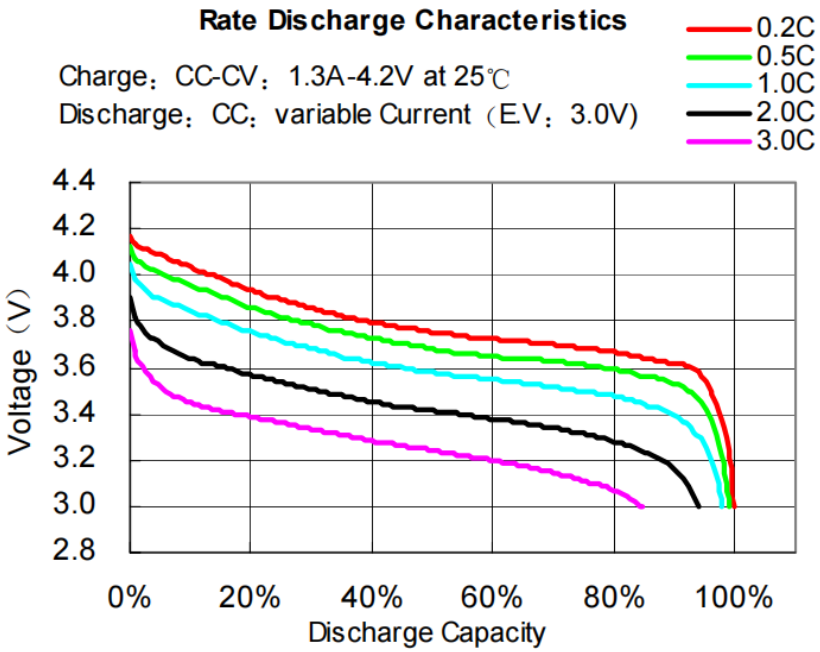

ANNOUNCEMENT

- Do not charge the battery without supervision.
- DO NOT make or build your own charging circuit.
- Insure LiPo cell balancing cable is connected.
- Before starting work, if applicable, understand one-hand working techniques.
- If you have dropped or damageda LiPo battery in anyway, do not attempt to charge it.
- Check cell voltage after the first charge to verify that the voltage has not exceeded the maximum charge voltage (Please refer to Chart 1). Check the voltage of each cell via the balance connector to verify that the voltage of each cell has not exceeded the maximum value.
- Never charge batteries unattended.
- For best practice store standard lipo batteries at 3.80 volts +/.05 volts per cell. Or at the manufacturer's suggested storage voltage for non standard chemistry's
- Before starting work, remove watches, metal rings, and other metal jewelry when working with or near large batteries or power supplies. If the metal from your jewelry comes into contact with a terminal, you become part of the circuit. Effects can vary from a small electric shock to burns or even electrocution, depending on the power of the battery.
- Do not puncture the cells as this could cause a fire.
- Every time a battery is not used actively (e.g. for more than 3 days), it should be placed in the storage area tAVOID being damaged and becoming unsafe.