3.7V Lithium Polymer Battery Data Sheet

Model: 356379

Please Find More:

https://www.fpbattery.com/3-7v-1700mah-lithium-polymer-battery/

File Number: A/FP6379-7549

File Version: 01

CONTACT

CUSTOMER SERVICE
86.755.3682.7358
sales@fpbattery.com
Hours of Operation:
9:00am-6:00pm CST, Monday to Friday

LEARN MORE ON:
https://www.fpbattery.com/

DNK POWER COMPANY LIMITED

BATTERY SPECIFICATION

Part Number	DNK 356379
Nominal Voltage	3.7 V
Nominal Capacity	1700 mAh
Internal Impedence	<60mΩ
Charge Voltage	4.2V
Recommended Charge Current	0.2 C
Allowed Max Charge Current	0.5 C
Output Voltage Range	4.2 - 2.5 V
Recommended Discharge Current	0.2 C
Max Continuous Discharge Current	1 C
Pulse Discharge Current	3 C (10 mS)
Discharge Cut-off Voltage	2.5± 0.05V
Cycle Life to 80% Health	500 (0.2C, 25°C)

1

Inflex and soler

1 YEAR WARRANTY

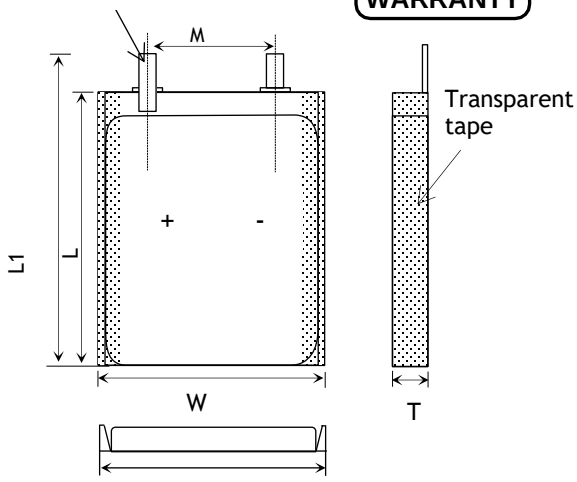

Item	Parameter (mm)
T	3
W	63
M	10
L	79
L_1	81
BL	81 ± 1
CL	100

ENVIRONMENTAL SPECIFICATIONS

Charging Temperature Range	0 - 45°C
Discharging Temperature Range	-20 - 60°C
Storage Period 1 Week	-20 - 45°C
Storage Period 1 Month	-10 - 45°C
Storage Period 6 Months	0 - 35°C

BATTERY PROTECTION

Over Charge	4.275 ± 50mV
Over Discharge	2.5V ± 50mV
Over Current	3A to 5A
Short Circuit	Yes

MECHANICAL SPECIFICATIONS

Dimensions	81x 63 x 3 mm(L*W*T)
Weight	28 g
Battery Terminals	WC/ FL *

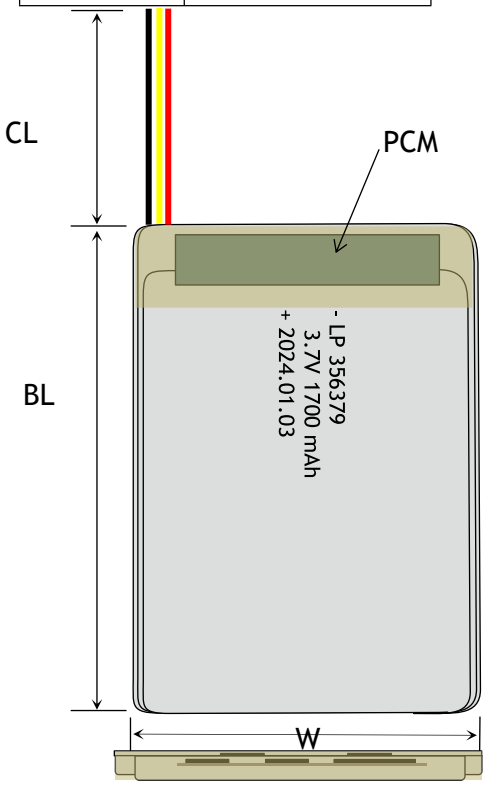

CERTIFICATION

Certification Approval	PLEASE CONSULT SALES

* WC=With Connector FL=Flying Leads UWP=Blue Wrapped PVC
BWP=Black Wrapped PVC BC= Bare Cell

RELATIVE CURVES

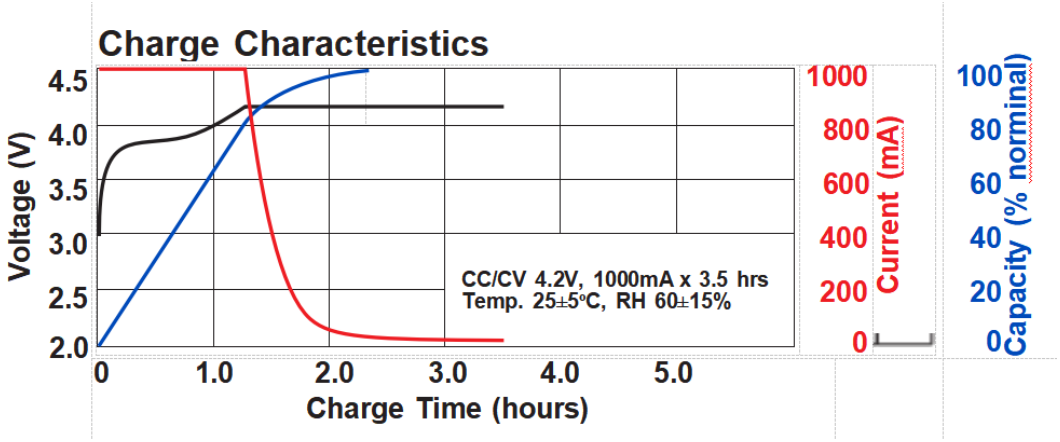

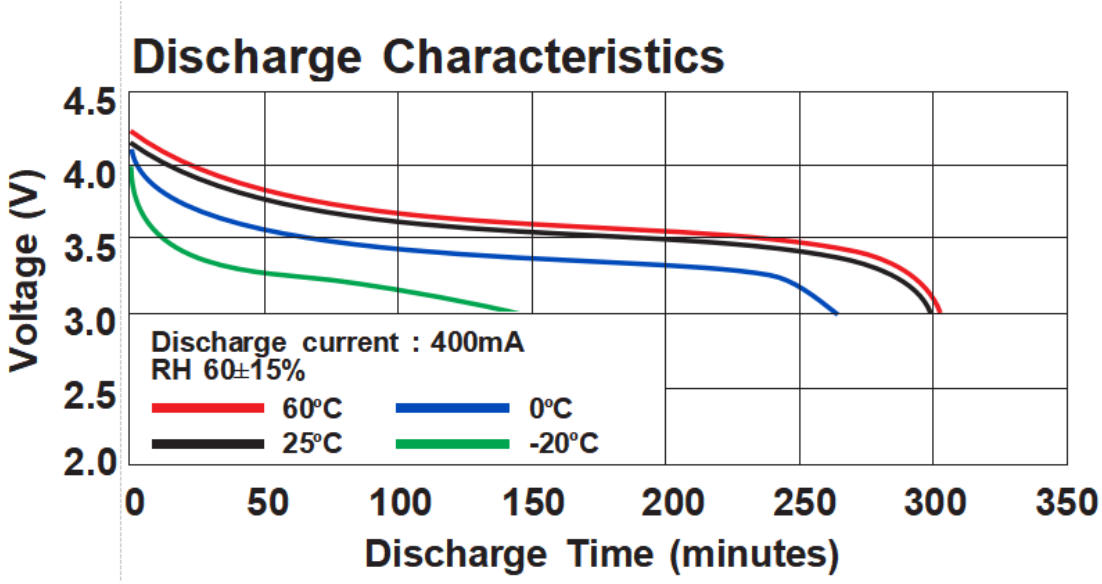

ANNOUNCEMENT

- 3.6V~3.9V range. Always store your LiPo pack in a safe and non flammable container away from flammable objects.
- Charge only with an approved LiPo charger, according to the parameters for the particular battery
- Never charge a damaged or inflated battery.
- Do not place the battery on flammable materials near a fire source.
- Never put LiPo batteries or battery packs in pockets, drawers or bags where they might make contact with something made of metal. This can cause a short circuit.
- Never charge batteries unattended.
- Do not short-circuit the battery.
- Always ensure you are using the correct charger for the specific battery type you are trying to charge. Example: If you are charging a Lipo battery, only use a charger designed for Lipo batteries. If the charger can support different battery types, ensure you select the correct type. Failure to do so may cause a re, which may result in personal injury and property damage.
- Do not allow a Lipo battery to get wet
- Store Li-Ion batteries and devices in dry, cool locations and in fire-resistant containers.
- Always check the voltage of Batteries before each charge session in order to ensure they are at or above the minimum safe starting voltage. If starting voltage is below recommended levels than Batteries have been over discharged or have experienced a failure and should NOT be charged