# 3.7V Lithium Polymer Battery Data Sheet

Model:  356367

Please Find More:

https://www.fpbattery.com/1500mah-lithium-polymer-battery/

File Number:  A/FP6367-3359

File Version: 01


CONTACT

CUSTOMER SERVICE
86.755.3682.7358
sales@fpbattery.com
Hours of Operation:
9:00am-6:00pm CST, Monday to Friday

LEARN MORE ON:
https://www.fpbattery.com/

DNK POWER COMPANY LIMITED

## BATTERY SPECIFICATION

| | |
|---|---|
| Part Number | DNK 356367 |
| Nominal Voltage | 3.7 V |
| Nominal Capacity | 1500 mAh |
| Internal Impedence | <60mΩ |
| Charge Voltage | 4.2V |
| Recommended Charge Current | 0.2 C |
| Allowed Max Charge Current | 0.5 C |
| Output Voltage Range | 4.2 - 2.5 V |
| Recommended Discharge Current | 0.2 C |
| Max Continuous Discharge Current | 1 C |
| Pulse Discharge Current | 3 C (10 mS) |
| Discharge Cut-off Voltage | 2.5± 0.05V |
| Cycle Life to 80% Health | 500 (0.2C, 25°C) |

1

**1 YEAR WARRANTY**

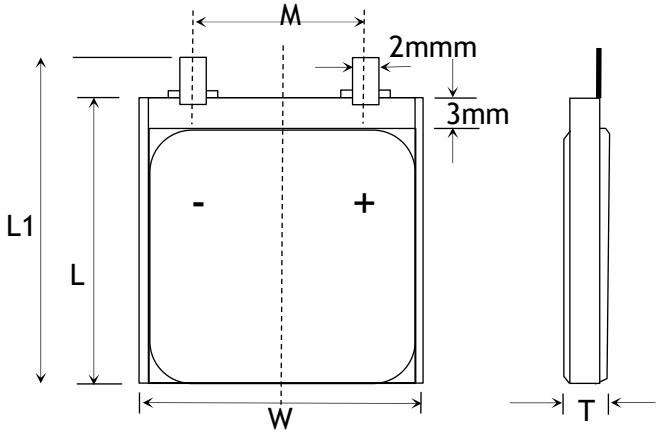


| Item | Parameter (mm) |
|---|---|
| T | 3 |
| W | 63 |
| M | 10 |
| L | 67 |
| $L_1$ | 69 |
| BL | 69 ± 1 |
| CL | 100 |

## ENVIRONMENTAL SPECIFICATIONS

| | |
|---|---|
| Charging Temperature Range | 0 - 45°C |
| Discharging Temperature Range | -20 - 60°C |
| Storage Period 1 Week | -20 - 45°C |
| Storage Period 1 Month | -10 - 45°C |
| Storage Period 6 Months | 0 - 35°C |

## BATTERY PROTECTION

| | |
|---|---|
| Over Charge | 4.275 ± 50mV |
| Over Discharge | 2.5V ± 50mV |
| Over Current | 3A to 5A |
| Short Circuit | Yes |

## MECHANICAL SPECIFICATIONS

| | |
|---|---|
| Dimensions | 69x 63 x 3 mm(L*W*T) |
| Weight | Around 25 g |
| Battery Terminals | WC/ FL * |

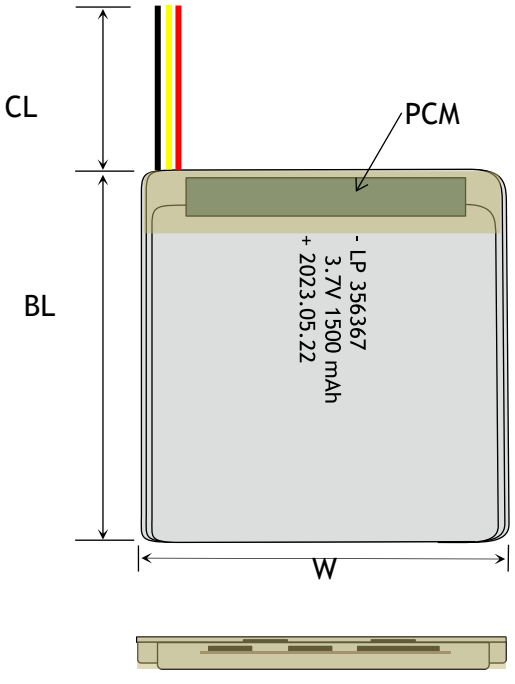


## CERTIFICATION

| | |
|---|---|
| Certification Approval | PLEASE CONSULT SALES |

* WC=With Connector FL=Flying Leads UWP=Blue Wrapped PVC
BWP=Black Wrapped PVC BC= Bare Cell

## BULK PRODUCTION ACTUAL PICTURES



BARE CELL (BC)




FLYING LEADS (FL)




WITH CONNECTOR (WC)



BLUE WRAPPED PVC (UWP)



BLACK WRAPPED PVC (BWP)

## 3.7V LIPO BATTERY OPTIONS



Special Ingredients to make batteries work from -40 -85 ° C



Discharging Current up to 100C



Popular JST,Molex,Hirose,Anderson available



LED Power Indicator



Power Button



Upgrade to LifePo4 tech and life circle up to 1500

# RELATIVE CURVES

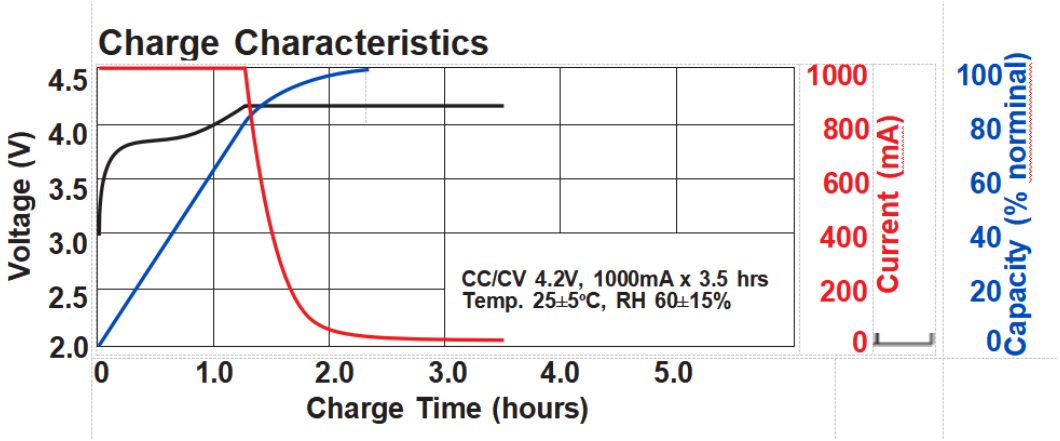


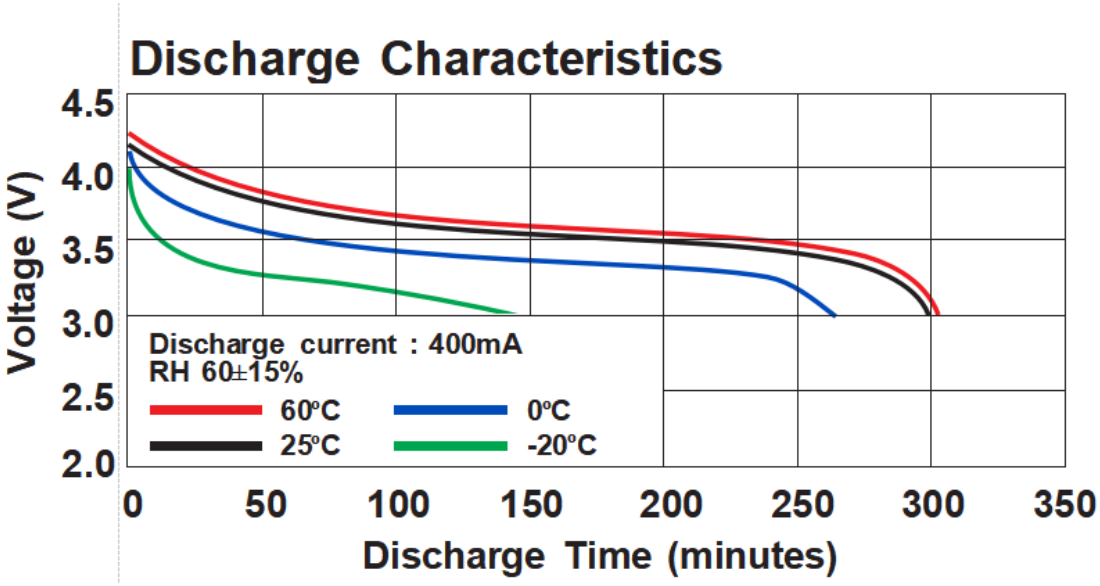


# ANNOUNCEMENT

- Security or other responsible staff on site who may be called to take action in an emergency should be made aware of the location of the charging area, the means for isolating the power and the action to take in an emergency.
- Do not use a battery that has been over-discharged.
- If a cell is venting or smoking, evacuate, all personnel from the area, closing doors behind you. The area should be secured to ensure that no unnecessary persons enter.
- DO NOT make or build your own charging circuit.
- A 5s4p battery pack means that the pack contains 5 cells in a series circuit and 4 cells in a parallel circuit. Since each cell is 3.7v (nominal) a 5s LiPo battery has a nominal voltage of 18.5V, a fully charged voltage of 21.0V and a maximum discharged voltage of 15.0V before damage occurs.
- Heat kills Lipos, the hotter a battery gets, the shorter the lifespan will be.
- Do not allow the battery to come into common contact with metal to prevent a short circuit.
- Avoid using charging methods other than wireless chargers.
- Always remove your LiPo battery from your model while charging. Remove the battery from you model and allow it to cool to ambient temperature before re-charging.
- When selecting the cell count or voltage for charging purposes, select the cell count and voltage as it appears on the battery label. As a safety precaution, please confirm that the information printed on the battery or label is correct. (Please refer to Chart 1). Selecting the wrong cell count or

charging voltage may cause fire.

- AVOID storing Li-ion batteries with metal objects, including in a drawer with coins.