3.7V Lithium Polymer Battery Data Sheet

Model: 356179

Please Find More:

https://www.fpbattery.com/3-7v-1700mah-lithium-polymer-battery/

File Number: A/FP6179-8420

File Version: 01

CONTACT

CUSTOMER SERVICE
86.755.3682.7358
sales@fpbattery.com
Hours of Operation:
9:00am-6:00pm CST, Monday to Friday

LEARN MORE ON:
https://www.fpbattery.com/

DNK POWER COMPANY LIMITED

BATTERY SPECIFICATION

Part Number	DNK 356179
Nominal Voltage	3.7 V
Nominal Capacity	1700 mAh
Internal Impedence	<60mΩ
Charge Voltage	4.2V
Recommended Charge Current	0.2 C
Allowed Max Charge Current	0.5 C
Output Voltage Range	4.2 - 2.5 V
Recommended Discharge Current	0.2 C
Max Continuous Discharge Current	1 C
Pulse Discharge Current	3 C (10 mS)
Discharge Cut-off Voltage	2.5± 0.05V
Cycle Life to 80% Health	500 (0.2C, 25°C)

1

ENVIRONMENTAL SPECIFICATIONS

Charging Temperature Range	0 - 45°C
Discharging Temperature Range	-20 - 60°C
Storage Period 1 Week	-20 - 45°C
Storage Period 1 Month	-10 - 45°C
Storage Period 6 Months	0 - 35°C

BATTERY PROTECTION

Over Charge	4.275 ± 50mV
Over Discharge	2.5V ± 50mV
Over Current	3A to 5A
Short Circuit	Yes

MECHANICAL SPECIFICATIONS

Dimensions	81x 61 x 3 mm(L*W*T)
Weight	28 g
Battery Terminals	WC/ FL *

CERTIFICATION

Certification Approval	PLEASE CONSULT SALES

* WC=With Connector FL=Flying Leads UWP=Blue Wrapped PVC BWP=Black Wrapped PVC BC= Bare Cell

Inflex and soler

1 YEAR WARRANTY

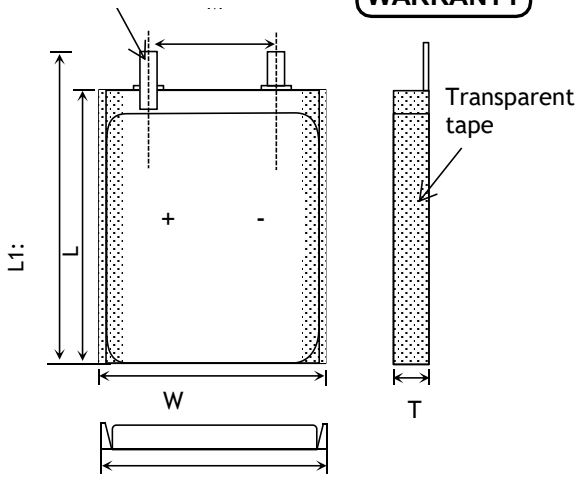

Item	Parameter (mm)
T	3
W	61
M	10
L	79
L_1	81
BL	81 ± 1
CL	100

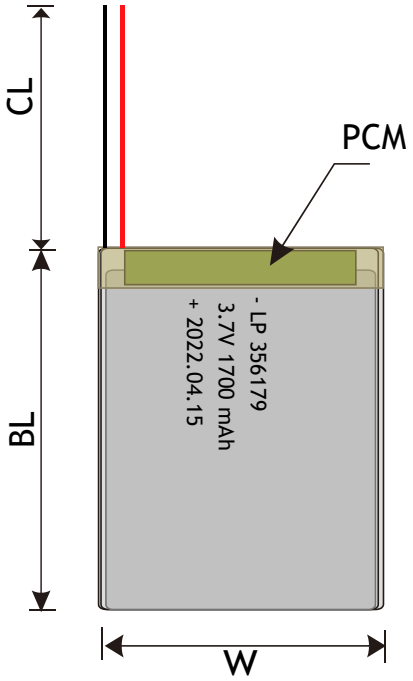

RELATIVE CURVES

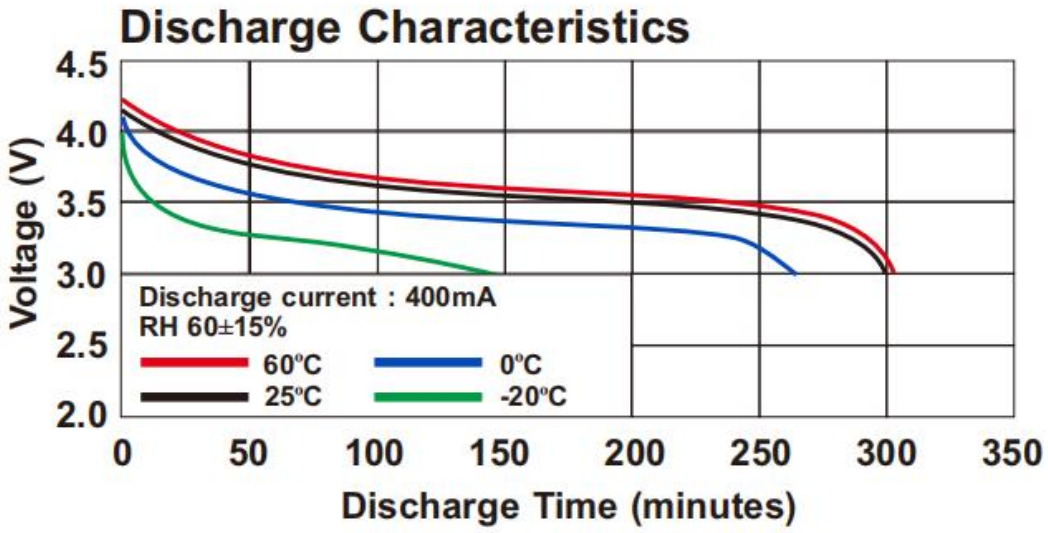

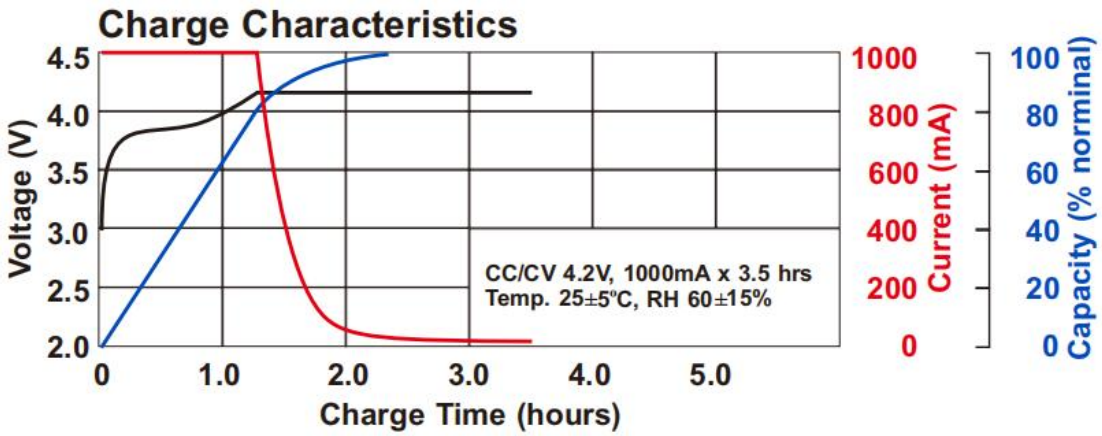

ANNOUNCEMENT

- Never charge a battery pack that has been punctured or damaged.
- Do not charge LiPo batteries in a vehicle or in the engine compartment of a vehicle.
- Then recycle the battery according to the instructions of your country/region. Never dispose of a LIPO battery with domestic waste.
- Store behind a fire door and where a fire alarm is situated.
- Always use a proper balance discharger when discharging your batteries
- If a remote device is not available, do not handle the cell for a period of at least 24 hours.
- Before recycling your defective battery, it must be neutralized. Take a plastic container, fill it with water and add a lot of salt until the water becomes opaque. Place the LiPo battery in the water and leave for 24 hours. Check with a voltmeter that the voltage is 0.0V.
- Do not reverse the polarity.
- Do not store LiPo batteries in extreme temperatures below 0C or above 50C.
- If the battery swells during charging, stop charging immediately and disconnect the battery from the charger. Leave the battery outside for a few hours and observe.
- Check the voltage of the pack or cells before charging. Do not attempt to charge any pack if the open voltage is lower than the Lowest Open Voltage. Check the voltage of each cell before charging via the balance connector. If the voltage of any cell is less than 3.0V/cell, remove it from service, and dispose of it properly.