3.7V Lithium Polymer Battery Data Sheet

Model: 356079

Please Find More:

https://www.fpbattery.com/3-7v-1700mah-lithium-polymer-battery/

File Number: A/FP6079-8837

File Version: 01

CONTACT

CUSTOMER SERVICE
86.755.3682.7358
sales@fpbattery.com
Hours of Operation:
9:00am-6:00pm CST, Monday to Friday

LEARN MORE ON:
https://www.fpbattery.com/

DNK POWER COMPANY LIMITED

BATTERY SPECIFICATION

Part Number	DNK 356079
Nominal Voltage	3.7 V
Nominal Capacity	1700 mAh
Internal Impedence	<60mΩ
Charge Voltage	4.2V
Recommended Charge Current	0.2 C
Allowed Max Charge Current	0.5 C
Output Voltage Range	4.2 - 2.5 V
Recommended Discharge Current	0.2 C
Max Continuous Discharge Current	1 C
Pulse Discharge Current	3 C (10 mS)
Discharge Cut-off Voltage	2.5± 0.05V
Cycle Life to 80% Health	500 (0.2C, 25°C)

1

ENVIRONMENTAL SPECIFICATIONS

Charging Temperature Range	0 - 45°C
Discharging Temperature Range	-20 - 60°C
Storage Period 1 Week	-20 - 45°C
Storage Period 1 Month	-10 - 45°C
Storage Period 6 Months	0 - 35°C

BATTERY PROTECTION

Over Charge	4.275 ± 50mV
Over Discharge	2.5V ± 50mV
Over Current	3A to 5A
Short Circuit	Yes

MECHANICAL SPECIFICATIONS

Dimensions	81x 60 x 3 mm(L*W*T)
Weight	Around 28 g
Battery Terminals	WC/ FL *

CERTIFICATION

Certification Approval	PLEASE CONSULT SALES

* WC=With Connector FL=Flying Leads UWP=Blue Wrapped PVC BWP=Black Wrapped PVC BC= Bare Cell

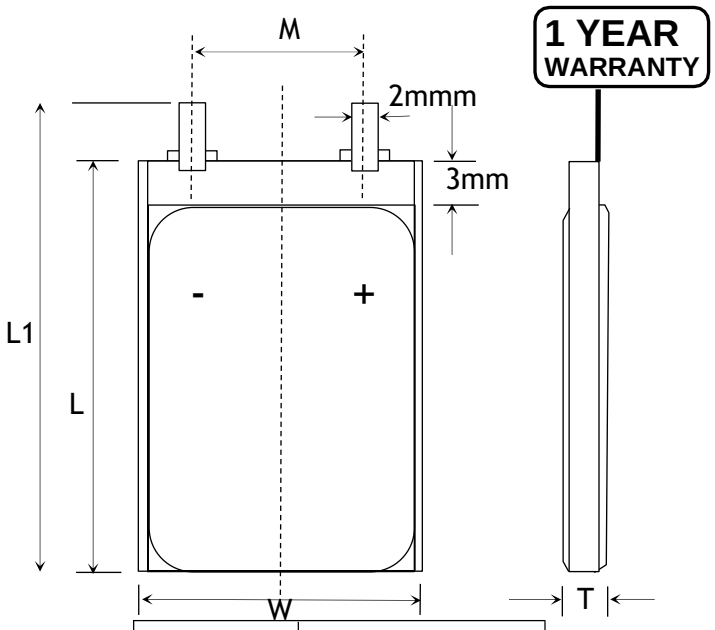

Item	Parameter (mm)
T	3
W	60
M	10
L	79
L_1	81
BL	81 ± 1
CL	100

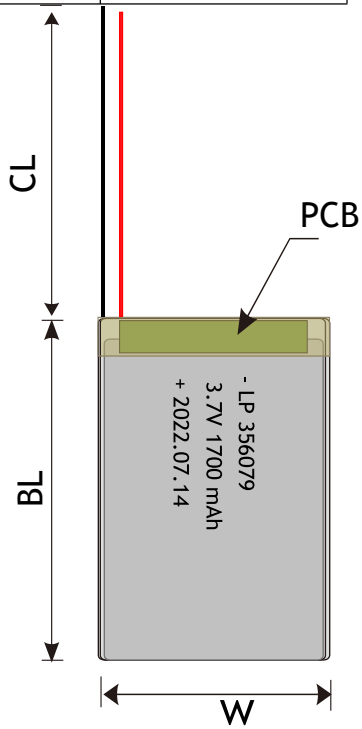

RELATIVE CURVES

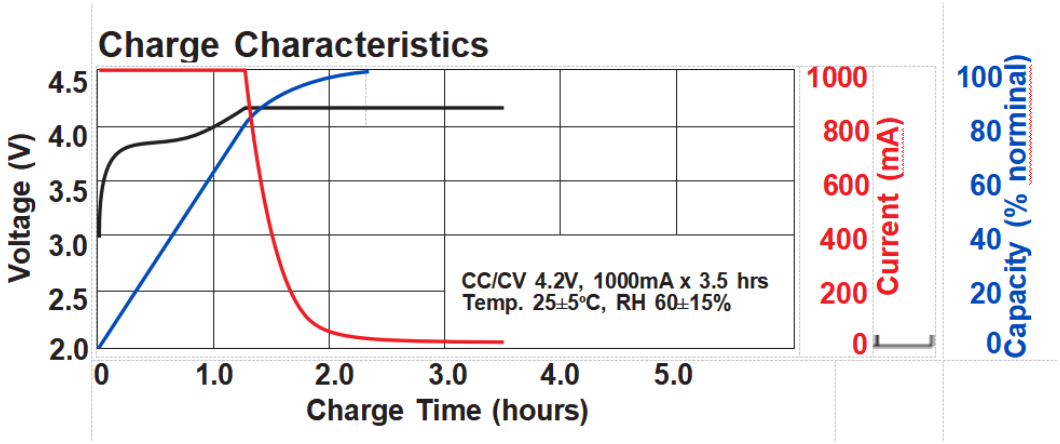

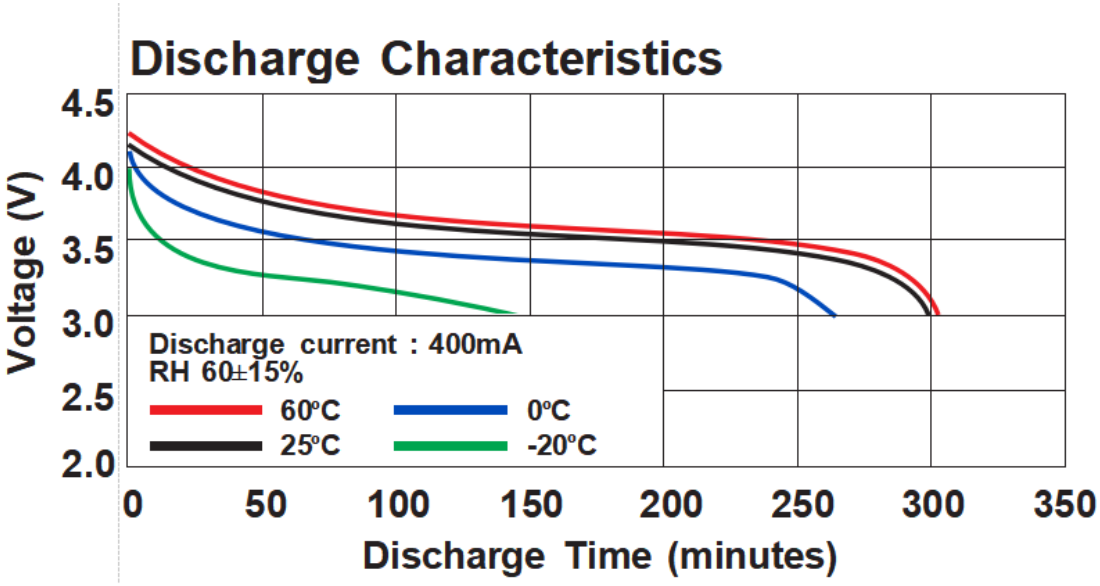

ANNOUNCEMENT

- For systems with multiple batteries, make sure each battery is of the same type and capacity.
- Do not expose LiPo batteries to direct sunlight or leave in a hot environment (inside an automobile in hot weather) for extended periods of time.
- NEVER extinguish LiPo batteries with water.
- NEVER alter or disassemble a Lipo battery.
- Do not inhale the smoke/fumes of a LiPo battery that is on fire. The smoke is toxic. Leave the area and call 911.
- Avoid exposing the battery to high humidity for long periods of time.
- ALWAYS evacuate the building to your unit's designated outside meeting location.
- Never put LiPo batteries or battery packs in pockets, drawers or bags where they might make contact with something made of metal. This can cause a short circuit.
- Store in a temperature protected area between 10 and 25 degrees Centigrade
- Lithium-ion batteries assembled to offer higher voltages (over 60V) may present electrical shock and arc hazards. Therefore adherence to applicable electrical protection standards (terminal protection, shielding, PPE etc.) is required tAVOID exposure to electrical hazards.
- Always use a balancer board to charge LiPo Battery with more than 1 cell.