3.7V Lithium Polymer Battery Data Sheet

Model: 356078

Please Find More:

https://www.fpbattery.com/3-7v-1600mah-lithium-polymer-battery/

File Number: A/FP6078-8513

File Version: 01

CONTACT

CUSTOMER SERVICE
86.755.3682.7358
sales@fpbattery.com
Hours of Operation:
9:00am-6:00pm CST, Monday to Friday

LEARN MORE ON:
https://www.fpbattery.com/

DNK POWER COMPANY LIMITED

BATTERY SPECIFICATION

Part Number	DNK 356078
Nominal Voltage	3.7 V
Nominal Capacity	1600 mAh
Internal Impedence	<60mΩ
Charge Voltage	4.2V
Recommended Charge Current	0.2 C
Allowed Max Charge Current	0.5 C
Output Voltage Range	4.2 - 2.5 V
Recommended Discharge Current	0.2 C
Max Continuous Discharge Current	1 C
Pulse Discharge Current	3 C (10 mS)
Discharge Cut-off Voltage	2.5± 0.05V
Cycle Life to 80% Health	500 (0.2C, 25°C)

1

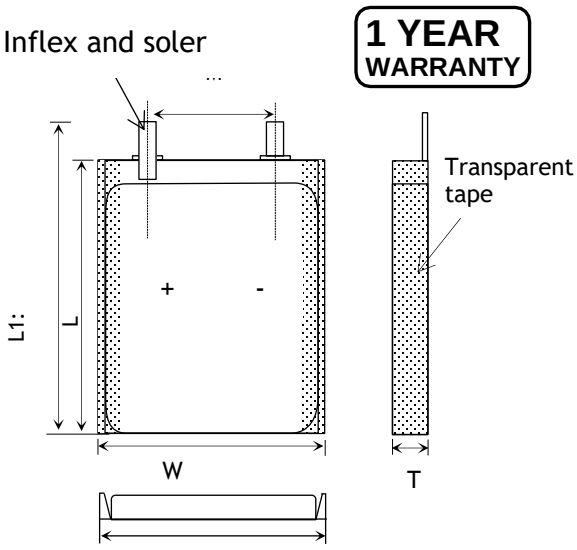

Item	Parameter (mm)
T	3
W	60
M	10
L	78
L_1	80
BL	80 ± 1
CL	100

ENVIRONMENTAL SPECIFICATIONS

Charging Temperature Range	0 - 45°C
Discharging Temperature Range	-20 - 60°C
Storage Period 1 Week	-20 - 45°C
Storage Period 1 Month	-10 - 45°C
Storage Period 6 Months	0 - 35°C

BATTERY PROTECTION

Over Charge	4.275 ± 50mV
Over Discharge	2.5V ± 50mV
Over Current	3A to 5A
Short Circuit	Yes

MECHANICAL SPECIFICATIONS

Dimensions	80x 60 x 3 mm(L*W*T)
Weight	26 g
Battery Terminals	WC/ FL *

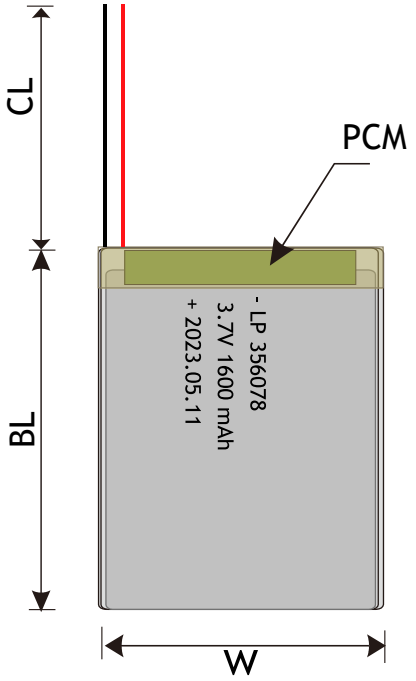

CERTIFICATION

Certification Approval	PLEASE CONSULT SALES

* WC=With Connector FL=Flying Leads UWP=Blue Wrapped PVC
BWP=Black Wrapped PVC BC= Bare Cell

RELATIVE CURVES

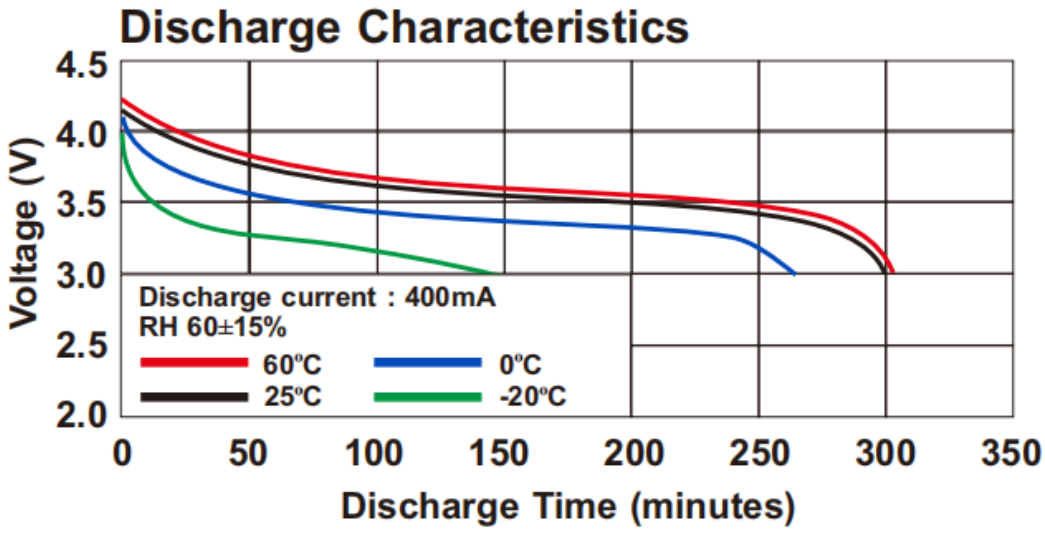

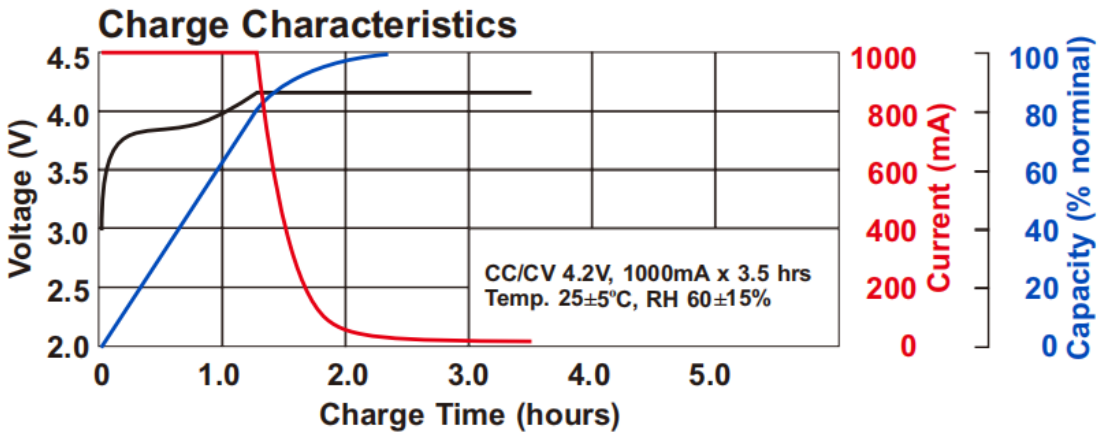

ANNOUNCEMENT

- Take maximum care when handling and installing LiPo batteries made of flexible aluminum packaging in your model. These batteries are quickly damaged on sharp edges or spikes.
- When not using your LiPo/Li-ion battery pack, store it at 60-70% of the pack's rated capacity. Lithium-ion cells should never be stored fully charged, it is suggested to store them with a voltage around 3.8V. Most of the chargers have a "storage mode" that will either charge or discharge the cell to the proper storage voltage. Experts recommend to put the cells in storage mode after every run, this will help the battery to lengthen the usable life span
- A LiPo Sack or metal/ceramic storage container is safest. Always store your LiPo's partially charged so they maintain their performance levels overtime; there is no need to cycle them unless When storing batteries for extended periods, store at a half charged state. stored for periods longer than 36 months.
- Never charge a LiPo battery near an exit. Keep exit egress clear in case of a fire or emergency.
- Avoid physical damage and short circuiting.
- Before starting work, if applicable, understand one-hand working techniques.
- Charge at correct rate and proper voltage for either use or storage.
- Use a dedicated lithium polymer battery charger and ensure that it meets the charging requirements of the battery.
- Never charge Batteries that are too hot to the touch (above 100° F). DO NOT handle Batteries until they are cool.
- Do not submit to static electricity risks tAVOID damages to the Protecting Circuit Board.
- Always remove your LiPo battery from your model while charging. Remove the battery from you model and allow it to cool to ambient temperature before re-charging.