3.7V Lithium Polymer Battery Data Sheet

Model: 355977

Please Find More:

https://www.fpbattery.com/3-7v-5500mah-lithium-polymer-battery/

File Number: A/FP5977-8686

File Version: 01

CONTACT

CUSTOMER SERVICE
86.755.3682.7358
sales@fpbattery.com
Hours of Operation:
9:00am-6:00pm CST, Monday to Friday

LEARN MORE ON:
https://www.fpbattery.com/

DNK POWER COMPANY LIMITED

BATTERY SPECIFICATION

Part Number	DNK 355977
Nominal Voltage	3.7 V
Nominal Capacity	1600 mAh
Internal Impedence	<60mΩ
Charge Voltage	4.2V
Recommended Charge Current	0.2 C
Allowed Max Charge Current	0.5 C
Output Voltage Range	4.2 - 2.5 V
Recommended Discharge Current	0.2 C
Max Continuous Discharge Current	1 C
Pulse Discharge Current	3 C (10 mS)
Discharge Cut-off Voltage	2.5± 0.05V
Cycle Life to 80% Health	500 (0.2C, 25°C)

1

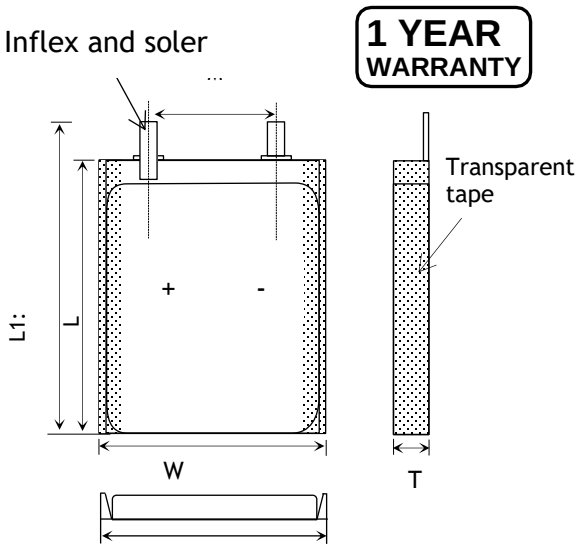

Item	Parameter (mm)
T	3
W	59
M	10
L	77
L_1	79
BL	79 ± 1
CL	100

ENVIRONMENTAL SPECIFICATIONS

Charging Temperature Range	0 - 45°C
Discharging Temperature Range	-20 - 60°C
Storage Period 1 Week	-20 - 45°C
Storage Period 1 Month	-10 - 45°C
Storage Period 6 Months	0 - 35°C

BATTERY PROTECTION

Over Charge	4.275 ± 50mV
Over Discharge	2.5V ± 50mV
Over Current	3A to 5A
Short Circuit	Yes

MECHANICAL SPECIFICATIONS

Dimensions	79x 59 x 3 mm(L*W*T)
Weight	26 g
Battery Terminals	WC/ FL *

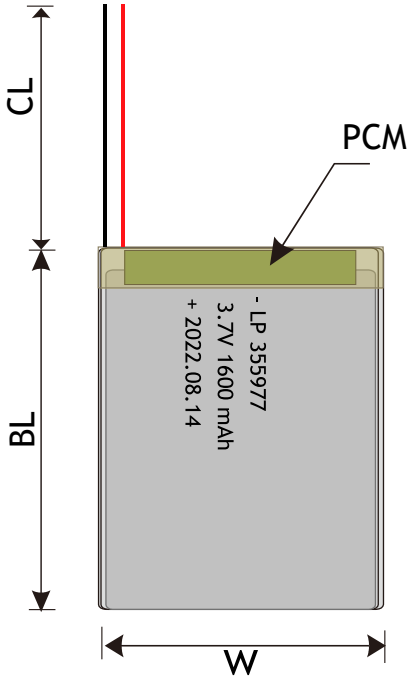

CERTIFICATION

Certification Approval	PLEASE CONSULT SALES

* WC=With Connector FL=Flying Leads UWP=Blue Wrapped PVC
BWP=Black Wrapped PVC BC= Bare Cell

RELATIVE CURVES

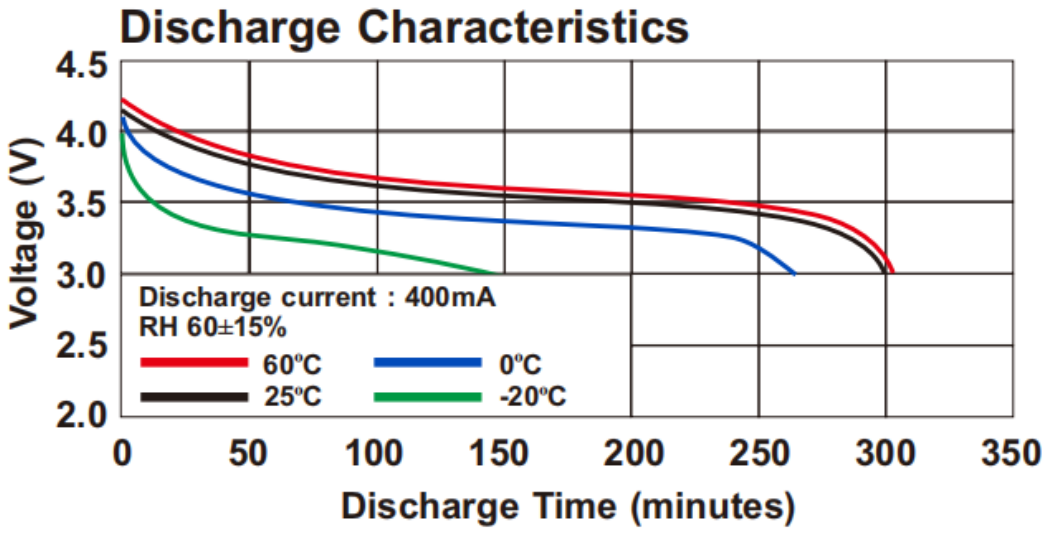

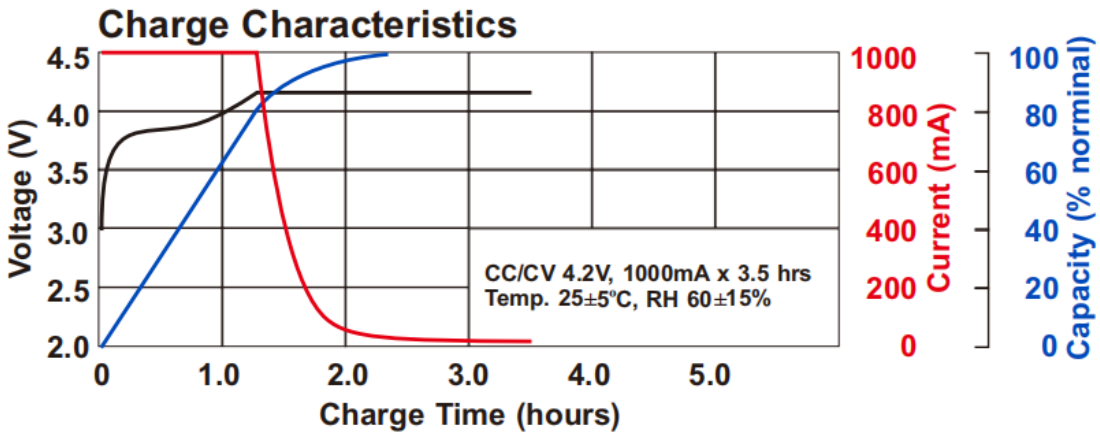

ANNOUNCEMENT

- Do not charge cells that have been stored in cold conditions (below 10°C/50°F), let them warm up (above (10°C/50°F), for a minimum of 60 minutes (longer is better).You risk an explosion if you attempt to use cells that have been stored at or below 0°C (32°F), Warm them first for at least 60 minutes (longer is better) above 10°C (50°F) before charging or discharging.
- Never charge a LiPo battery near an exit. Keep exit egress clear in case of a fire or emergency.
- NEVER attempt to extinguish this type of fire yourself – portable fire extinguishers have proven to be ineffective in extinguishing Li-Ion and LiPo battery fires.
- Charge on non-conductive, non-combustible surfaces.
- Do not discharge the battery at a higher current than the maximum continuous discharging current. A higher discharging current may cause overheating which will lead to ballooning, swelling, or possibly result in fire. For example, a 5000mAh battery with a designed maximum 35C discharge current must not have a continuous discharge rate or load of more than 175 Amps. For longer cycle life, a continuous discharging current of 70%-80% of the designed maximum discharging current is acceptable and recommended.
- If you start seeing any physical changes to the battery while discharging example puffing, STOP charging immediately and dispose of the battery responsibly.
- If you notice your LiPo battery pack is swelling while charging, stop the charging process immediately, put the battery in a safe non-flammable metal container and observe it.
- Do not approach the cell until it reaches room temperature. The cell temperature can be checked using a remote device (i.e. infrared thermometer).
- Do not use the battery during charging to avoid overheating and safety accidents.
- Always follow the manufacturer’s safety instructions
- Follow all safe operating guidelines and recommendations provided by the manufacturer.