3.7V Lithium Polymer Battery Data Sheet

Model: 355866

Please Find More:

https://www.fpbattery.com/3-7v-1300mah-lithium-polymer-battery/

File Number: A/FP5866-4980

File Version: 01

CONTACT

CUSTOMER SERVICE
86.755.3682.7358
sales@fpbattery.com
Hours of Operation:
9:00am-6:00pm CST, Monday to Friday

LEARN MORE ON:
https://www.fpbattery.com/

DNK POWER COMPANY LIMITED

BATTERY SPECIFICATION

Part Number	DNK 355866
Nominal Voltage	3.7 V
Nominal Capacity	1300 mAh
Internal Impedence	<60mΩ
Charge Voltage	4.2V
Recommended Charge Current	0.2 C
Allowed Max Charge Current	0.5 C
Output Voltage Range	4.2 - 2.5 V
Recommended Discharge Current	0.2 C
Max Continuous Discharge Current	1 C
Pulse Discharge Current	3 C (10 mS)
Discharge Cut-off Voltage	2.5± 0.05V
Cycle Life to 80% Health	500 (0.2C, 25°C)

1

1 YEAR WARRANTY

Inflex and soler

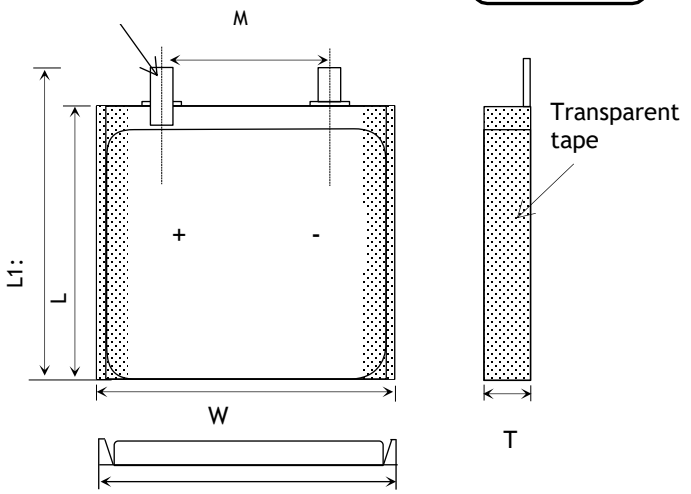

Item	Parameter (mm)
T	3
W	58
M	10
L	66
L_1	68
BL	68 ± 1
CL	100

ENVIRONMENTAL SPECIFICATIONS

Charging Temperature Range	0 - 45°C
Discharging Temperature Range	-20 - 60°C
Storage Period 1 Week	-20 - 45°C
Storage Period 1 Month	-10 - 45°C
Storage Period 6 Months	0 - 35°C

BATTERY PROTECTION

Over Charge	4.275 ± 50mV
Over Discharge	2.5V ± 50mV
Over Current	3A to 5A
Short Circuit	Yes

MECHANICAL SPECIFICATIONS

Dimensions	68x 58 x 3 mm(L*W*T)
Weight	Around 21 g
Battery Terminals	WC/ FL *

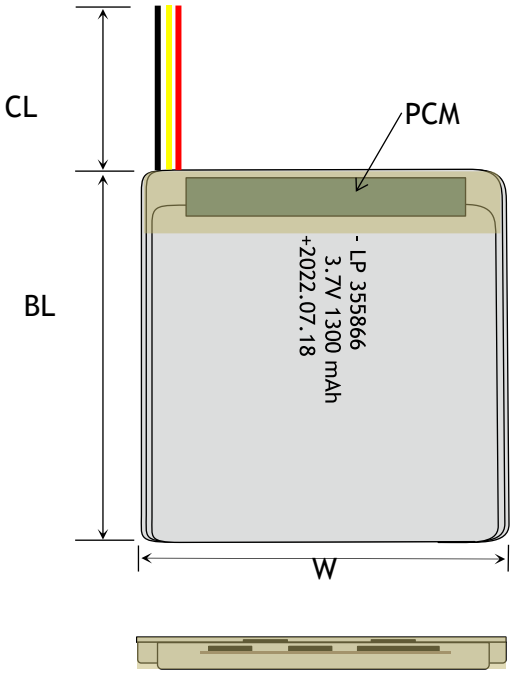

CERTIFICATION

Certification Approval	PLEASE CONSULT SALES

* aWC=With Connector FL=Flying Leads UWP=Blue Wrapped PVC
BWP=Black Wrapped PVC BC= Bare Cell

BULK PRODUCTION ACTUAL PICTURES



BARE CELL (BC)



FLYING LEADS (FL)



WITH CONNECTOR (WC)



BLUE WRAPPED PVC (UWP)



BLACK WRAPPED PVC (BWP)

3.7V LIPO BATTERY OPTIONS



Special Ingredients to make batteries work from -40 -85 ° C



Discharging Current up to 100C



Popular JST,Molex,Hirose,Anderson available



LED Power Indicator



Power Button



Upgrade to LifePo4 tech and life circle up to 1500

RELATIVE CURVES

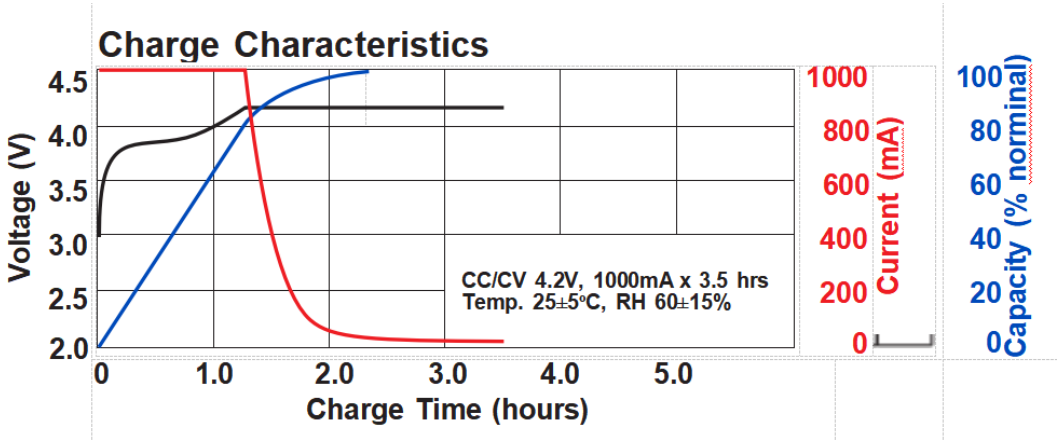

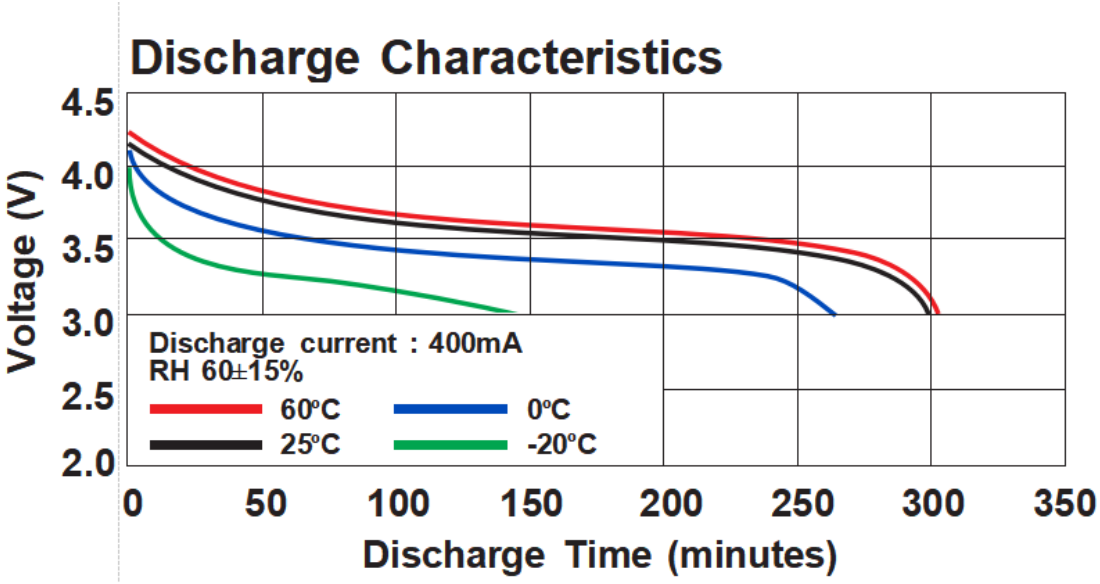

ANNOUNCEMENT

- Avoid placing the battery in a damp environment.
- Avoid frequent shutdowns and restarts of the device on the way to using the battery.
- All batteries should be stored, charged and used in accordance with the manufacturer’s instructions.
- NEVER attempt to charge a one-time-use (non-rechargeable) Li-Ion or LiPo battery.
- The battery should be transported with 10-50% charged states.
- Use a reliable power adapter to avoid unstable current output.
- Do not charge hot cells after use. Warm cells are OK. Always let hot cells cool before charging.
- For best practice store standard lipo batteries at 3.80 volts +/.05 volts per cell. Or at the manufacturer's suggested storage voltage for non standard chemistry's
- Never leave a battery unattended while charging. During the entire process of charging your LiPo battery, you must constantly observe and monitor the charging process so that you can quickly react to any problems that may occur and to be certain that the battery is being charged properly.
- Avoid placing the battery near sources of ignition.
- LiPo safe bags help contain heat and flames that results if a Li-Ion battery combusts during charging or while in storage.