3.7V Lithium Polymer Battery Data Sheet

Model: 355573

Please Find More:

https://www.fpbattery.com/3-7v-5500mah-lithium-polymer-battery/

File Number: A/FP5573-8999

File Version: 01

CONTACT

CUSTOMER SERVICE
86.755.3682.7358
sales@fpbattery.com
Hours of Operation:
9:00am-6:00pm CST, Monday to Friday

LEARN MORE ON:
https://www.fpbattery.com/

DNK POWER COMPANY LIMITED

BATTERY SPECIFICATION

Part Number	DNK 355573
Nominal Voltage	3.7 V
Nominal Capacity	1400 mAh
Internal Impedence	<60mΩ
Charge Voltage	4.2V
Recommended Charge Current	0.2 C
Allowed Max Charge Current	0.5 C
Output Voltage Range	4.2 - 2.5 V
Recommended Discharge Current	0.2 C
Max Continuous Discharge Current	1 C
Pulse Discharge Current	3 C (10 mS)
Discharge Cut-off Voltage	2.5± 0.05V
Cycle Life to 80% Health	500 (0.2C, 25°C)

1

ENVIRONMENTAL SPECIFICATIONS

Charging Temperature Range	0 - 45°C
Discharging Temperature Range	-20 - 60°C
Storage Period 1 Week	-20 - 45°C
Storage Period 1 Month	-10 - 45°C
Storage Period 6 Months	0 - 35°C

BATTERY PROTECTION

Over Charge	4.275 ± 50mV
Over Discharge	2.5V ± 50mV
Over Current	3A to 5A
Short Circuit	Yes

MECHANICAL SPECIFICATIONS

Dimensions	75x 55 x 3 mm(L*W*T)
Weight	Around 23 g
Battery Terminals	WC/ FL *

CERTIFICATION

Certification Approval	PLEASE CONSULT SALES

* WC=With Connector FL=Flying Leads UWP=Blue Wrapped PVC BWP=Black Wrapped PVC BC= Bare Cell

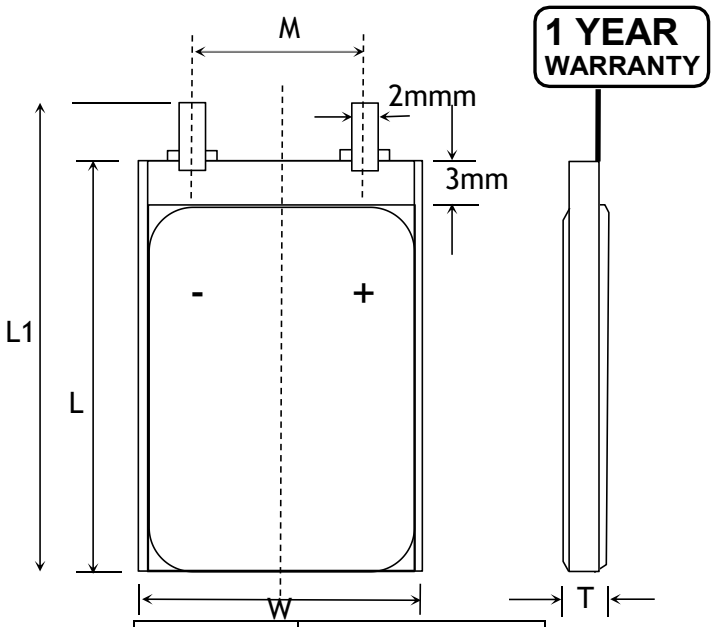

Item	Parameter (mm)
T	3
W	55
M	10
L	73
L_1	75
BL	75 ± 1
CL	100

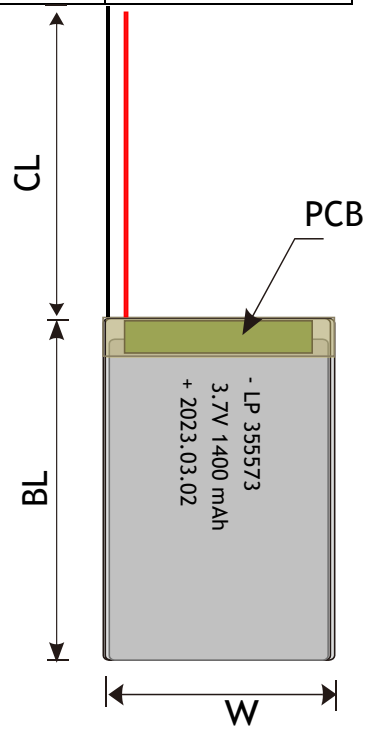

RELATIVE CURVES

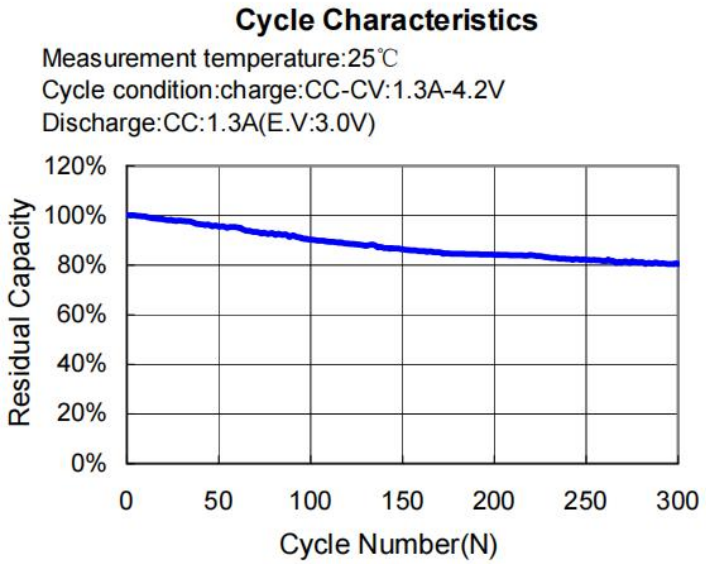

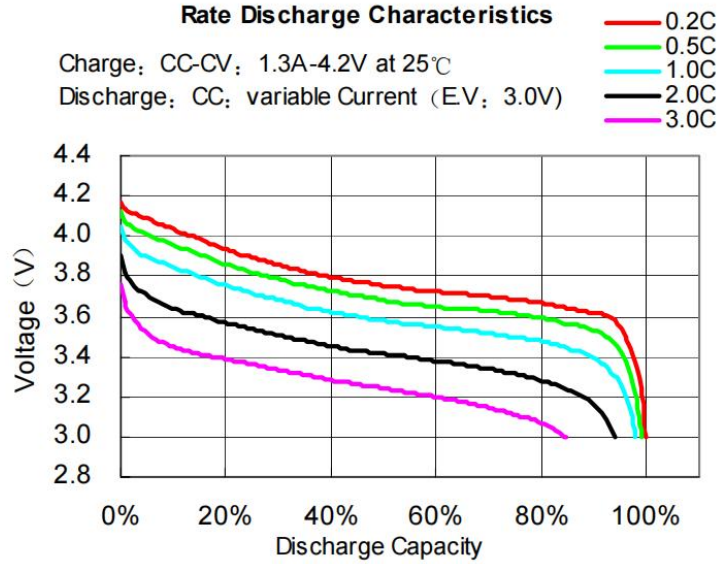

ANNOUNCEMENT

- Obtain sand. Use in bottom of isolation containers and as a smothering agent in case of fire.
- Never immerse the battery in water or allow it to get wet.
- Work on insulated surfaces. Avoid sharp edges and tools.
- Do not allow a Lipo battery to get wet
- Have a class ABC or CO2 fire extinguisher nearby the storage area.
- Avoid placing the battery in a damp environment.
- NEVER put discarded batteries in piles.
- Discharge the battery to 50% before storing it for an extended period of time.
- Set up emergency battery isolation container.
- Be sure to read all documentation supplied with your battery.
- Ensure that you purchase the right type and size of battery that matches the requirements of your equipment.