3.7V Lithium Polymer Battery Data Sheet

Model: 355468

Please Find More:

https://www.fpbattery.com/3-7v-1300mah-lithium-polymer-battery/

File Number: A/FP5468-7630

File Version: 01

CONTACT

CUSTOMER SERVICE
86.755.3682.7358
sales@fpbattery.com
Hours of Operation:
9:00am-6:00pm CST, Monday to Friday

LEARN MORE ON:
https://www.fpbattery.com/

DNK POWER COMPANY LIMITED

BATTERY SPECIFICATION

Part Number	DNK 355468
Nominal Voltage	3.7 V
Nominal Capacity	1300 mAh
Internal Impedence	<60mΩ
Charge Voltage	4.2V
Recommended Charge Current	0.2 C
Allowed Max Charge Current	0.5 C
Output Voltage Range	4.2 - 2.5 V
Recommended Discharge Current	0.2 C
Max Continuous Discharge Current	1 C
Pulse Discharge Current	3 C (10 mS)
Discharge Cut-off Voltage	2.5± 0.05V
Cycle Life to 80% Health	500 (0.2C, 25°C)

1

Inflex and soler

1 YEAR WARRANTY

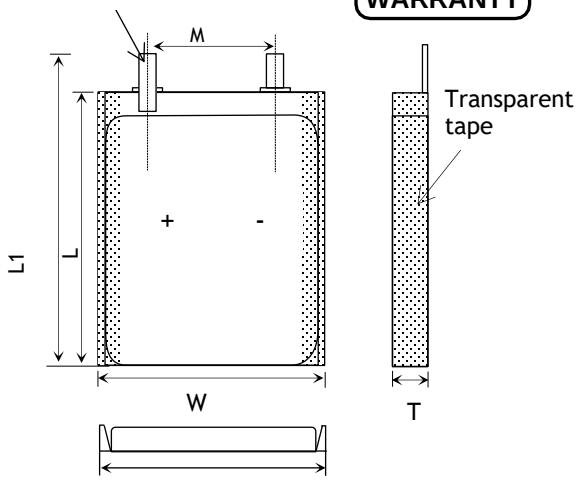

Item	Parameter (mm)
T	3
W	54
M	10
L	68
L_1	70
BL	70 ± 1
CL	100

ENVIRONMENTAL SPECIFICATIONS

Charging Temperature Range	0 - 45°C
Discharging Temperature Range	-20 - 60°C
Storage Period 1 Week	-20 - 45°C
Storage Period 1 Month	-10 - 45°C
Storage Period 6 Months	0 - 35°C

BATTERY PROTECTION

Over Charge	4.275 ± 50mV
Over Discharge	2.5V ± 50mV
Over Current	3A to 5A
Short Circuit	Yes

MECHANICAL SPECIFICATIONS

Dimensions	70x 54 x 3 mm(L*W*T)
Weight	21 g
Battery Terminals	WC/ FL *

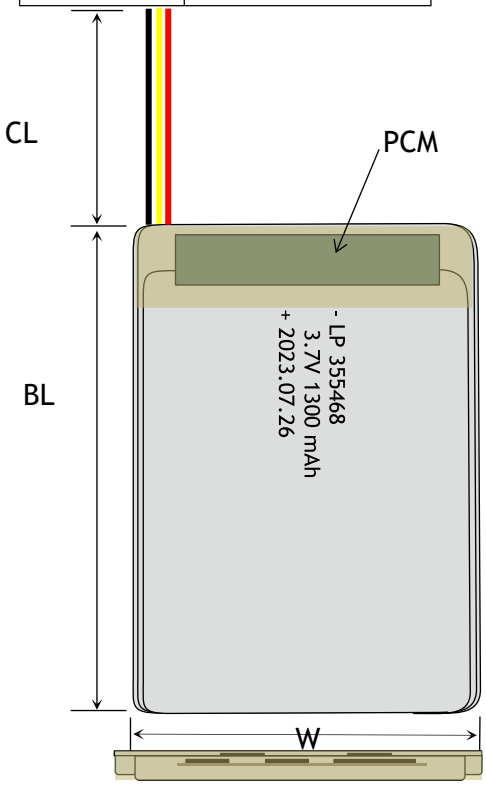

CERTIFICATION

Certification Approval	PLEASE CONSULT SALES

* WC=With Connector FL=Flying Leads UWP=Blue Wrapped PVC
BWP=Black Wrapped PVC BC= Bare Cell

RELATIVE CURVES

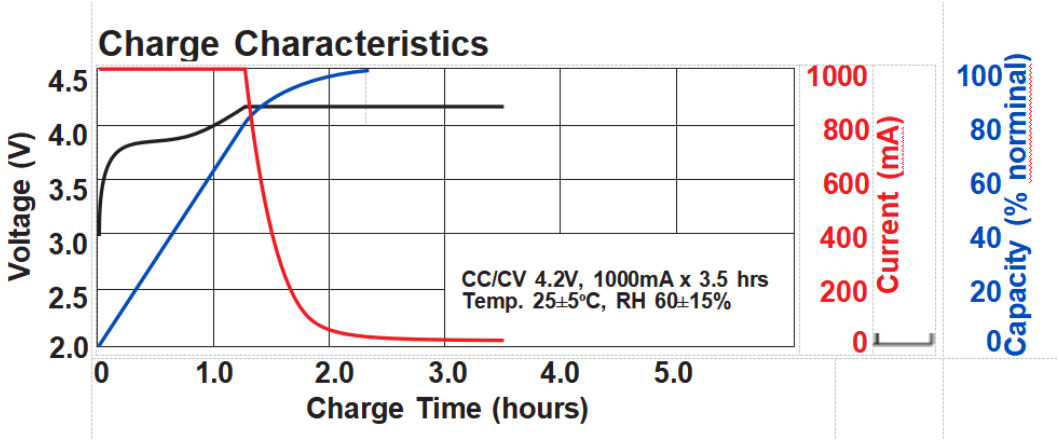

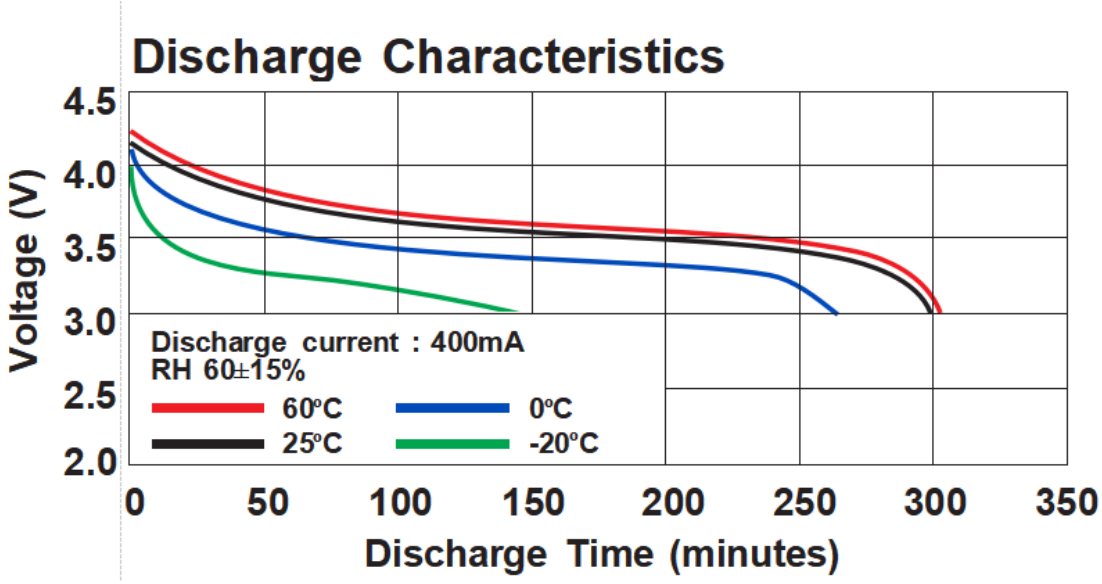

ANNOUNCEMENT

- Regularly check the condition of the battery. Do not use if damaged or swollen
- Avoid purchasing low quality batteries to avoid accidents.
- If the battery develops an abnormal condition, stop using it immediately.
- Lithium-ion batteries assembled to offer higher voltages (over 60V) may present electrical shock and arc hazards. Therefore adherence to applicable electrical protection standards (terminal protection, shielding, PPE etc.) is required tAVOID exposure to electrical hazards.
- Do not mix different types of batteries or mix new and old ones together (e.g. in a power pack).
- Never charge a lithium polymer battery pack that has been punctured or damaged in a crash.
- Obtain container to safely transport LiPo batteries between the labs and use locations. Remove from vehicle once at the destination.
- Do not inhale the smoke/fumes of a LiPo battery that is on fire. The smoke is toxic. Leave the area and call 911.
- ALWAYS locate exits and evacuation routes in your area. Know the location of portable fire extinguishers in the area, and the location of the nearest fire alarm pull station (if the building is equipped with a fire alarm system).
- Follow all safe operating guidelines and recommendations provided by the manufacturer.
- Do not immerse the battery in water or expose it to moisture.