3.7V Lithium Polymer Battery Data Sheet

Model: 355370

Please Find More:

https://www.fpbattery.com/3-7v-1300mah-lithium-polymer-battery/

File Number: A/FP5370-8916

File Version: 01

CONTACT

CUSTOMER SERVICE
86.755.3682.7358
sales@fpbattery.com
Hours of Operation:
9:00am-6:00pm CST, Monday to Friday

LEARN MORE ON:
https://www.fpbattery.com/

DNK POWER COMPANY LIMITED

BATTERY SPECIFICATION

Part Number	DNK 355370
Nominal Voltage	3.7 V
Nominal Capacity	1300 mAh
Internal Impedence	<60mΩ
Charge Voltage	4.2V
Recommended Charge Current	0.2 C
Allowed Max Charge Current	0.5 C
Output Voltage Range	4.2 - 2.5 V
Recommended Discharge Current	0.2 C
Max Continuous Discharge Current	1 C
Pulse Discharge Current	3 C (10 mS)
Discharge Cut-off Voltage	2.5± 0.05V
Cycle Life to 80% Health	500 (0.2C, 25°C)

1

ENVIRONMENTAL SPECIFICATIONS

Charging Temperature Range	0 - 45°C
Discharging Temperature Range	-20 - 60°C
Storage Period 1 Week	-20 - 45°C
Storage Period 1 Month	-10 - 45°C
Storage Period 6 Months	0 - 35°C

BATTERY PROTECTION

Over Charge	4.275 ± 50mV
Over Discharge	2.5V ± 50mV
Over Current	3A to 5A
Short Circuit	Yes

MECHANICAL SPECIFICATIONS

Dimensions	72x 53 x 3 mm(L*W*T)
Weight	Around 21 g
Battery Terminals	WC/ FL *

CERTIFICATION

Certification Approval	PLEASE CONSULT SALES

* WC=With Connector FL=Flying Leads UWP=Blue Wrapped PVC BWP=Black Wrapped PVC BC= Bare Cell

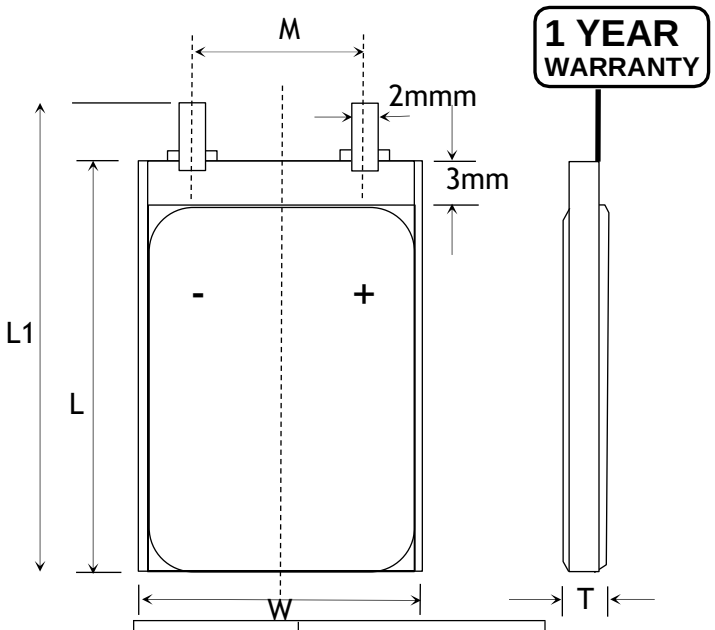

Item	Parameter (mm)
T	3
W	53
M	10
L	70
L_1	72
BL	72 ± 1
CL	100

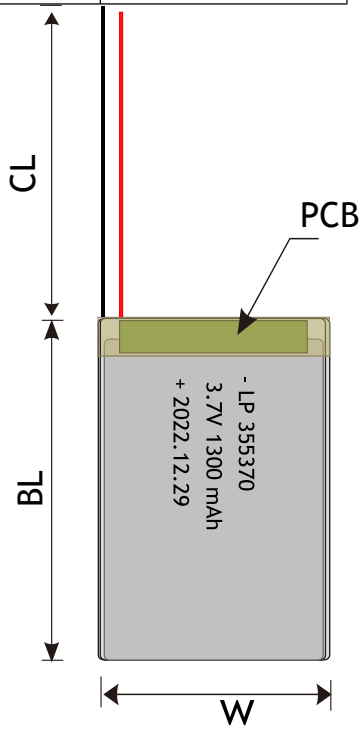

RELATIVE CURVES

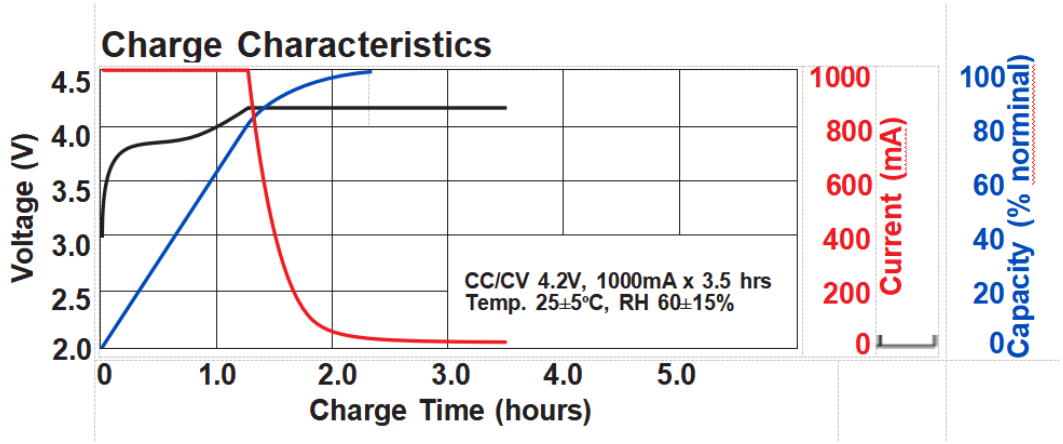

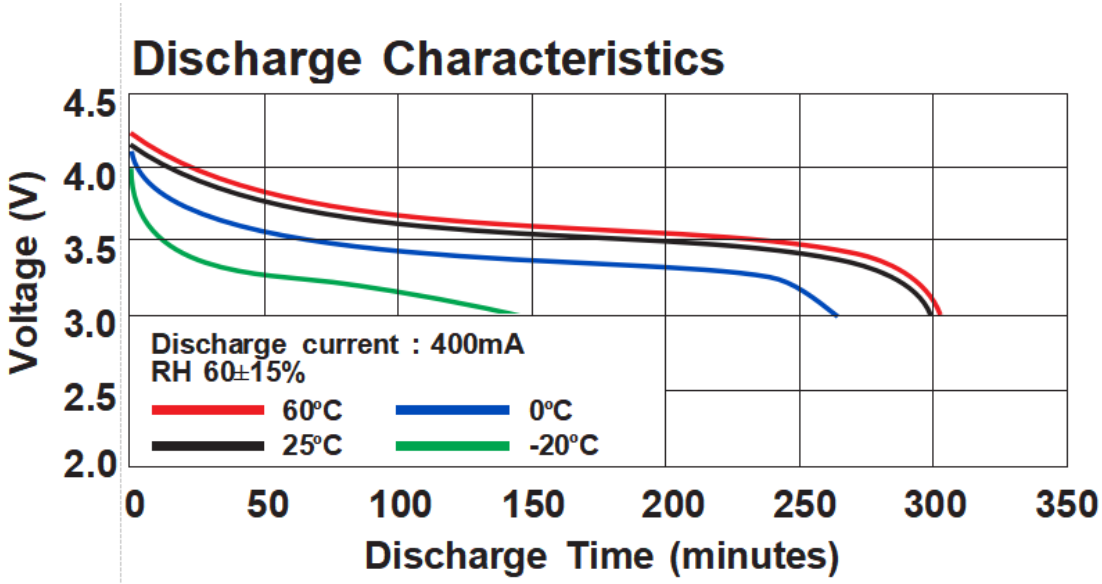

ANNOUNCEMENT

- Take maximum care when handling and installing LiPo batteries made of flexible aluminum packaging in your model. These batteries are quickly damaged on sharp edges or spikes.
- Do not expose the battery to direct sunlight for extended periods of time.
- Always store LiPo pack in a safe and nonGcombustible container away from flammable/combustible materials.
- Be aware that many of the more expensive LiPo chargers will automatically detect the cell count of the battery being charged; cheaper chargers will require a manual setting.
- In premises that also provide sleeping accommodation, serious consideration should be given, wherever practicable, to using timers to control socket outlets used for charging equipment
- Do not reverse the polarity.
- Do not over-discharge (3.2V per cell)
- Do not apply excessive mechanical stress to the battery.
- Insulate all battery terminals on batteries to be disposed of.
- Over-charging LiPo batteries will damage them and possibly cause a fire. (above 4.20V per cell is considered overcharged).
- The battery and all electrical connections must be protected against splashing liquids. Electrical cables and connectors must be protected against accidental tearing.