3.7V Lithium Polymer Battery Data Sheet

Model: 355361

Please Find More:

https://www.fpbattery.com/3-7v-1100mah-lithium-polymer-battery/

File Number: A/FP5361-5358

File Version: 01

CONTACT

CUSTOMER SERVICE
86.755.3682.7358
sales@fpbattery.com
Hours of Operation:
9:00am-6:00pm CST, Monday to Friday

LEARN MORE ON:
https://www.fpbattery.com/

DNK POWER COMPANY LIMITED

BATTERY SPECIFICATION

Part Number	DNK 355361
Nominal Voltage	3.7 V
Nominal Capacity	1100 mAh
Internal Impedence	<60mΩ
Charge Voltage	4.2V
Recommended Charge Current	0.2 C
Allowed Max Charge Current	0.5 C
Output Voltage Range	4.2 - 2.5 V
Recommended Discharge Current	0.2 C
Max Continuous Discharge Current	1 C
Pulse Discharge Current	3 C (10 mS)
Discharge Cut-off Voltage	2.5± 0.05V
Cycle Life to 80% Health	500 (0.2C, 25°C)

1

1 YEAR WARRANTY

Inflex and soler

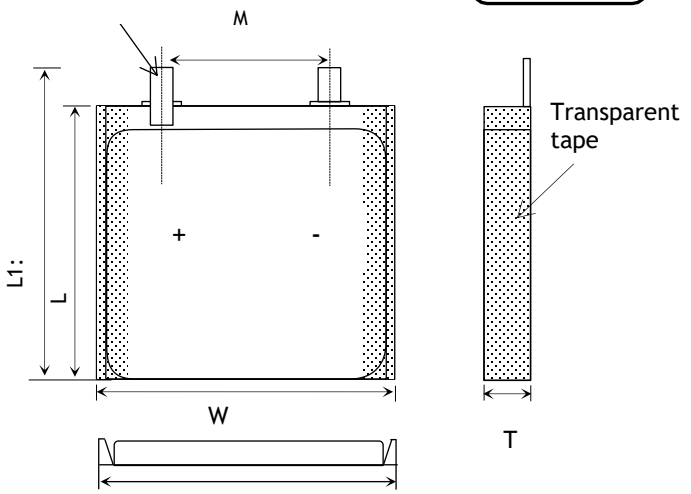

Item	Parameter (mm)
T	3
W	53
M	10
L	61
L_1	63
BL	63 ± 1
CL	100

ENVIRONMENTAL SPECIFICATIONS

Charging Temperature Range	0 - 45°C
Discharging Temperature Range	-20 - 60°C
Storage Period 1 Week	-20 - 45°C
Storage Period 1 Month	-10 - 45°C
Storage Period 6 Months	0 - 35°C

BATTERY PROTECTION

Over Charge	4.275 ± 50mV
Over Discharge	2.5V ± 50mV
Over Current	3A to 5A
Short Circuit	Yes

MECHANICAL SPECIFICATIONS

Dimensions	63x 53 x 3 mm(L*W*T)
Weight	Around 18 g
Battery Terminals	WC/ FL *

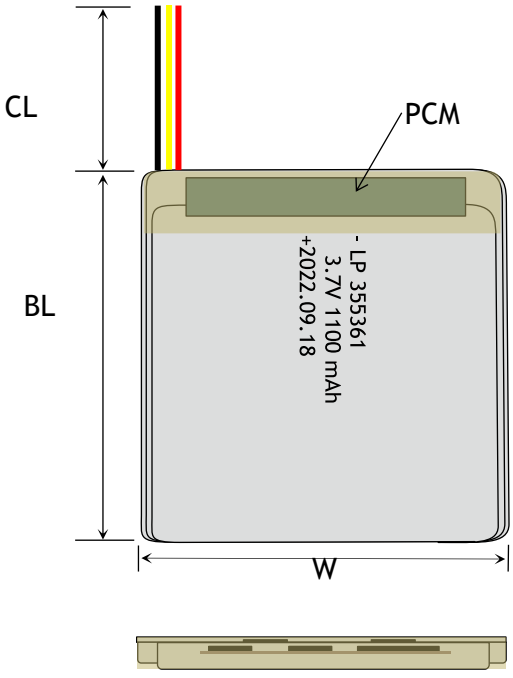

CERTIFICATION

Certification Approval	PLEASE CONSULT SALES

* aWC=With Connector FL=Flying Leads UWP=Blue Wrapped PVC
BWP=Black Wrapped PVC BC= Bare Cell

BULK PRODUCTION ACTUAL PICTURES



BARE CELL (BC)



FLYING LEADS (FL)



WITH CONNECTOR (WC)



BLUE WRAPPED PVC (UWP)



BLACK WRAPPED PVC (BWP)

3.7V LIPO BATTERY OPTIONS



Special Ingredients to make batteries work from -40 -85 ° C



Discharging Current up to 100C



Popular JST,Molex,Hirose,Anderson available



LED Power Indicator



Power Button



Upgrade to LifePo4 tech and life circle up to 1500

RELATIVE CURVES

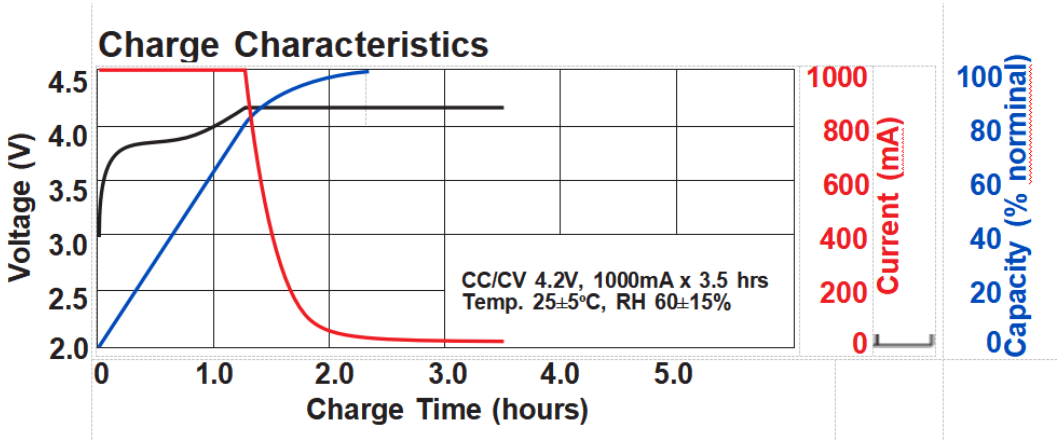

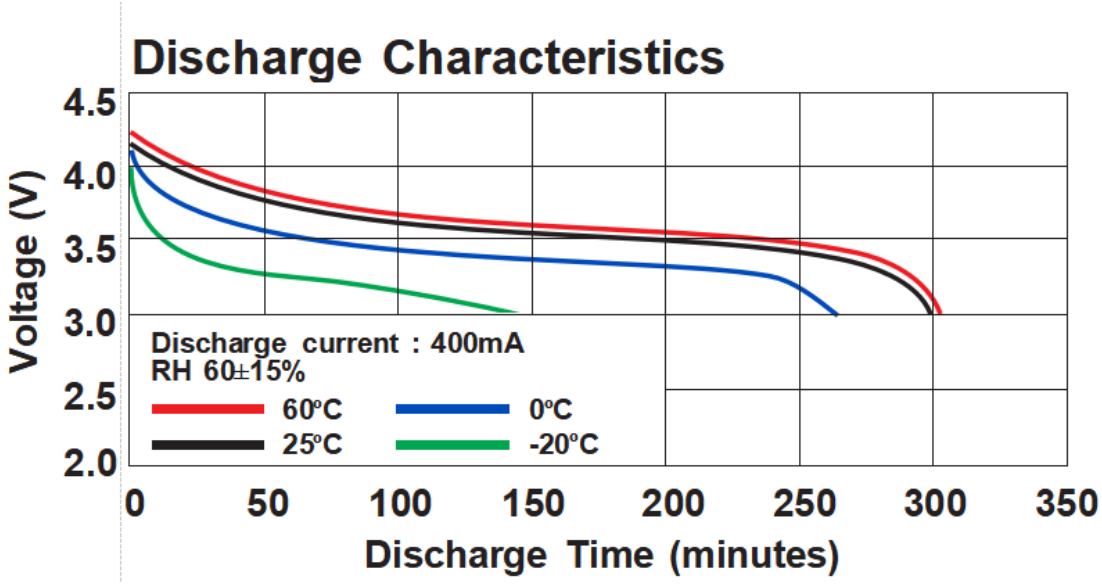

ANNOUNCEMENT

- Every time a battery is not used actively (e.g. for more than 3 days), it should be placed in the storage area tAVOID being damaged and becoming unsafe.
- If your skin or eyes come into contact with liquid from the battery, rinse thoroughly and notify a medical service for expert advice.
- The discharge temperature range is between 32˚F (0˚C) and 113˚F (45˚C).
- Store in fire protected, separate areas.
- Never charge a LiPo battery while inside your model.
- ALWAYS provide information to the fire department on their arrival: room number or location of the fire and that Li-Ion or LiPo batteries are involved.
- ALWAYS evacuate the room or space and notify others to evacuate.
- Avoid physical damage and short circuiting.
- Charging with higher current than recommended value may cause damage to cell electrical, mechanical and safety performance and could lead to heat generation or leakage.
- Before starting work,make sure your Li-po batteries, chargers, and associated equipment are tested in accordance with an appropriate test standard (e.g., UL 2054), certified by a Nationally Recognized Testing Laboratory (NRTL), and rated for their intended uses.
- Use a reliable power adapter to avoid unstable current output.