3.7V Lithium Polymer Battery Data Sheet

Model: 355179

Please Find More:

https://www.fpbattery.com/3-7v-1400mah-lithium-polymer-battery/

File Number: A/FP5179-13074

File Version: 01

CONTACT

CUSTOMER SERVICE
86.755.3682.7358
sales@fpbattery.com
Hours of Operation:
9:00am-6:00pm CST, Monday to Friday

LEARN MORE ON:
https://www.fpbattery.com/

DNK POWER COMPANY LIMITED

BATTERY SPECIFICATION

Part Number	DNK 355179
Nominal Voltage	3.7 V
Nominal Capacity	1400 mAh
Internal Impedence	<60mΩ
Charge Voltage	4.2V
Recommended Charge Current	0.2 C
Allowed Max Charge Current	0.5 C
Output Voltage Range	4.2 - 2.5 V
Recommended Discharge Current	0.2 C
Max Continuous Discharge Current	1 C
Pulse Discharge Current	3 C (10 mS)
Discharge Cut-off Voltage	2.5± 0.05V
Cycle Life to 80% Health	500 (0.2C, 25°C)

1

1 YEAR WARRANTY

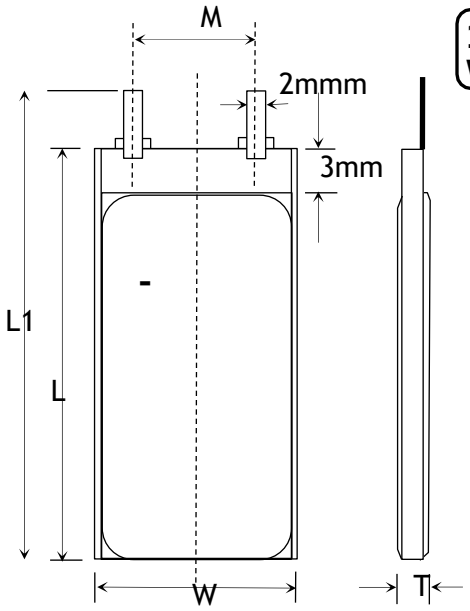

Item	Parameter (mm)
T	3
W	51
M	10
L	79
L_1	81
BL	81 ± 1
CL	100

ENVIRONMENTAL SPECIFICATIONS

Charging Temperature Range	0 - 45°C
Discharging Temperature Range	-20 - 60°C
Storage Period 1 Week	-20 - 45°C
Storage Period 1 Month	-10 - 45°C
Storage Period 6 Months	0 - 35°C

BATTERY PROTECTION

Over Charge	4.275 ± 50mV
Over Discharge	2.5V ± 50mV
Over Current	3A to 5A
Short Circuit	Yes

MECHANICAL SPECIFICATIONS

Dimensions	81x 51 x 3 mm(L*W*T)
Weight	Around 23 g
Battery Terminals	WC/ FL *

CERTIFICATION

Certification Approval	PLEASE CONSULT SALES

* WC=With Connector FL=Flying Leads UWP=Blue Wrapped PVC BWP=Black Wrapped PVC BC= Bare Cell

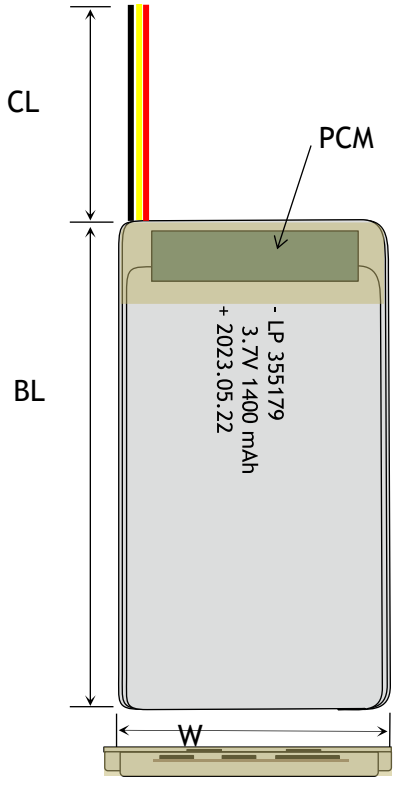

RELATIVE CURVES

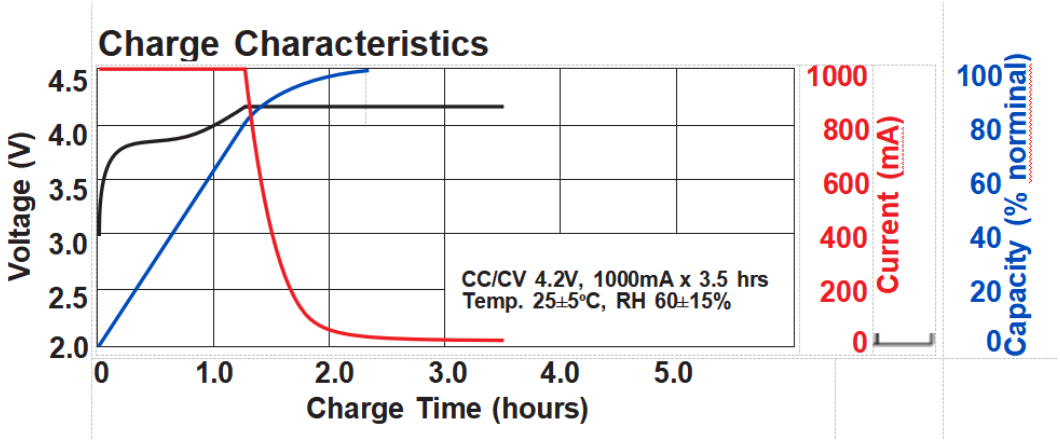

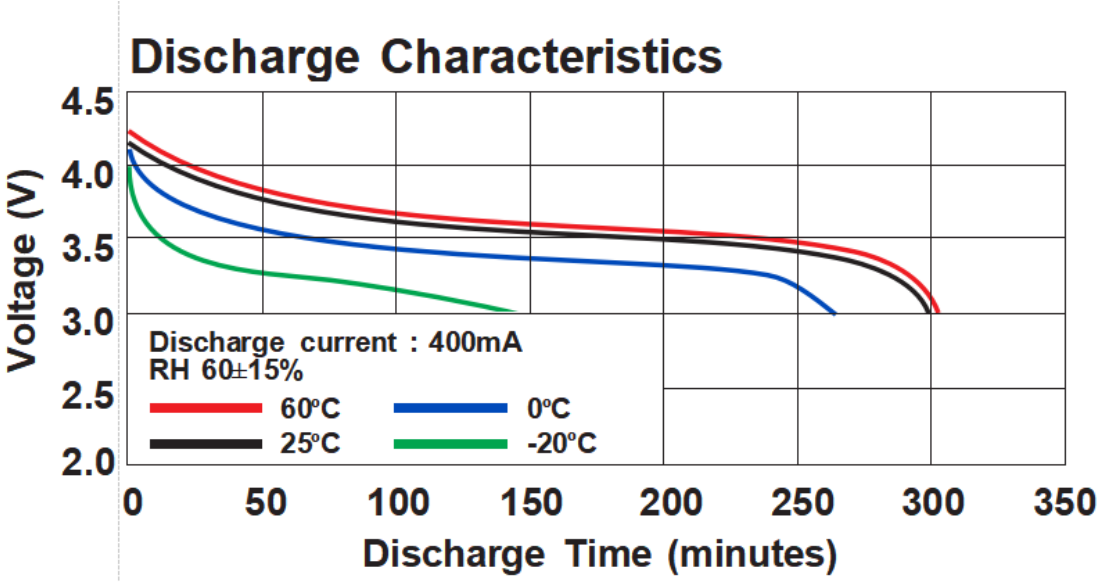

ANNOUNCEMENT

- Never charge a LiPo pack that has ballooned or swelled due to over/under charging or from a crash.
- Do not place the battery in a microwave or other heating device.
- Slow down the charging and discharging rate of the battery in low temperature environment.
- Short circuits may cause fire and injury! If you plan to cut the battery's terminal wires, you must cut each wire individually, making sure the wires not to touch each other. Otherwise, a short circuit may occur and potentially cause a fire. If you accidentally cause the battery to short circuit, place it in a safe space and observe it for at least 15 minutes. The battery may swell or possibly catch fire during this time. Additionally, the powerful electric current may cause severe injuries if the battery leads come in contact with rings or jewelry. Dispose of used or damaged LiPo batteries at your local Hazardous Waste Facility or Recycling Center.
- Always verify voltage of Batteries before use, this is especially important for packs that have been out of service for greater than six (months.
- Only charge LiPo batteries with chargers specifically designed to charge LiPo batteries. NEVER use a NiMH or NiCd charger! Failure to use a proper charger might cause a fire resulting in personal injury and/or property damage. Some LiPo chargers on the market may have technical deficiencies which may result in incorrect charging or charging at an improper rate. It is your responsibility to determine that your charger works properly.
- Use the charger program to charge the LiPo batteries, never use any other program.
- Dedicate a battery storage area free of combustible materials.
- Do not place metallic substances in direct contact with the positive and negative terminals of the battery.
- Take maximum care when handling and installing LiPo batteries made of flexible aluminum packaging in your model. These batteries are quickly damaged on sharp edges or spikes.

- Before starting work, if applicable, understand one-hand working techniques.