3.7V Lithium Polymer Battery Data Sheet

Model: 355078

Please Find More:

https://www.fpbattery.com/3-7v-1400mah-lithium-polymer-battery/

File Number: A/FP5078-13240

File Version: 01

CONTACT

CUSTOMER SERVICE
86.755.3682.7358
sales@fpbattery.com
Hours of Operation:
9:00am-6:00pm CST, Monday to Friday

LEARN MORE ON:
https://www.fpbattery.com/

DNK POWER COMPANY LIMITED

BATTERY SPECIFICATION

Part Number	DNK 355078
Nominal Voltage	3.7 V
Nominal Capacity	1400 mAh
Internal Impedence	<60mΩ
Charge Voltage	4.2V
Recommended Charge Current	0.2 C
Allowed Max Charge Current	0.5 C
Output Voltage Range	4.2 - 2.5 V
Recommended Discharge Current	0.2 C
Max Continuous Discharge Current	1 C
Pulse Discharge Current	3 C (10 mS)
Discharge Cut-off Voltage	2.5± 0.05V
Cycle Life to 80% Health	500 (0.2C, 25°C)

1

1 YEAR WARRANTY

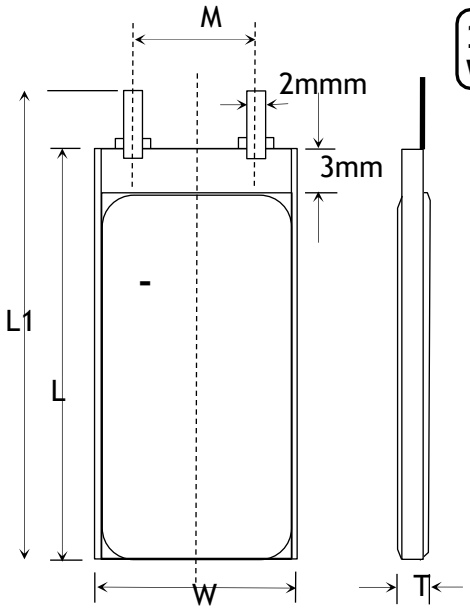

Item	Parameter (mm)
T	3
W	50
M	10
L	78
L_1	80
BL	80 ± 1
CL	100

ENVIRONMENTAL SPECIFICATIONS

Charging Temperature Range	0 - 45°C
Discharging Temperature Range	-20 - 60°C
Storage Period 1 Week	-20 - 45°C
Storage Period 1 Month	-10 - 45°C
Storage Period 6 Months	0 - 35°C

BATTERY PROTECTION

Over Charge	4.275 ± 50mV
Over Discharge	2.5V ± 50mV
Over Current	3A to 5A
Short Circuit	Yes

MECHANICAL SPECIFICATIONS

Dimensions	80x 50 x 3 mm(L*W*T)
Weight	Around 23 g
Battery Terminals	WC/ FL *

CERTIFICATION

Certification Approval	PLEASE CONSULT SALES

* WC=With Connector FL=Flying Leads UWP=Blue Wrapped PVC BWP=Black Wrapped PVC BC= Bare Cell

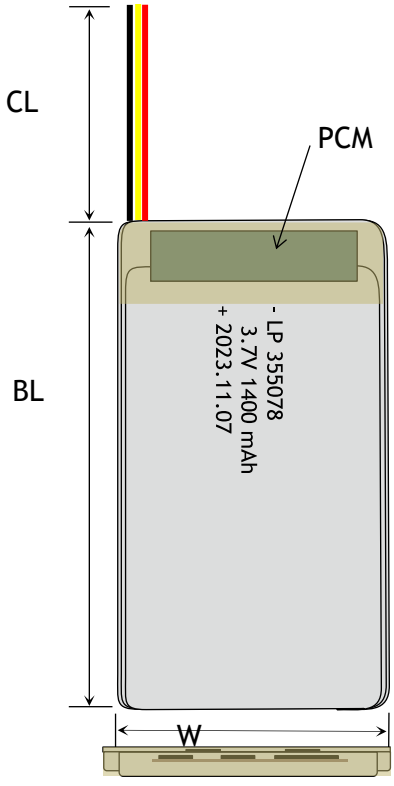

RELATIVE CURVES

Constant Current Charge Characteristics---1.7A

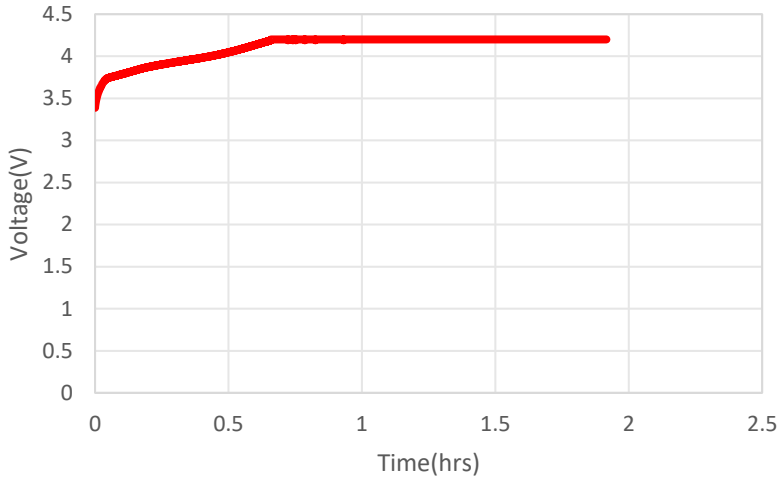

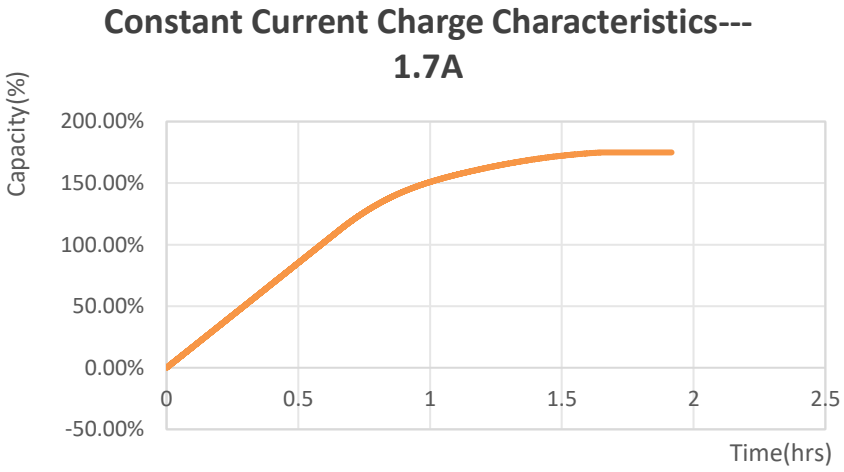

ANNOUNCEMENT

- Do not puncture the cells as this could cause a fire.
- Before starting work, remove watches, metal rings, and other metal jewelry when working with or near large batteries or power supplies. If the metal from your jewelry comes into contact with a terminal, you become part of the circuit. Effects can vary from a small electric shock to burns or even electrocution, depending on the power of the battery.
- Do not charge LiPo batteries in the model as you can not successfully monitor and move them quickly if necessary.
- Always balance charge batteries using the charger's balance charging option. Otherwise, an unbalanced cell may become over charged. This will reduce the life of the battery, and possibly cause a fire which could result in personal injury and property damage.
- Do not mix different types of batteries or mix new and old ones together (e.g. in a power pack).
- Do not use batteries with physical damage, such as dented, cracked or leaking batteries.
- Before starting work,ensure that a written experimental protocol including safety information is available.
- Discharge Lipo Battery at Environmental temperature : -20°C~60°C.
- Higher cell voltage during storage will increase the self-discharge rate of the battery, which may lead to over-discharge and deteriorate battery performance. It is recommended that the battery remain at a lower voltage (about 3.8V/cell) throughout the period of storage. If the battery is to be stored for longer than one year, the user should charge the battery at least once per year to 3.8V/cell to prevent over-discharge.
- LiPo batteries have very specific charging requirements. Some chargers, such as those used for toys or cellphones, are made to charge a specific cell count and are not configurable for other cell counts. The LiPo charger used must be able to handle the cell count of the battery you arecharging.
- Check cell voltage after the first charge to verify that the voltage has not exceeded the maximum charge voltage (Please refer to Chart 1). Check the

voltage of each cell via the balance connector to verify that the voltage of each cell has not exceeded the maximum value.