3.7V Lithium Polymer Battery Data Sheet

Model: 355069

Please Find More:

https://www.fpbattery.com/1200mah-lipo-battery/

File Number: A/FP5069-10045

File Version: 01

CONTACT

CUSTOMER SERVICE
86.755.3682.7358
sales@fpbattery.com
Hours of Operation:
9:00am-6:00pm CST, Monday to Friday

LEARN MORE ON:
https://www.fpbattery.com/

DNK POWER COMPANY LIMITED

BATTERY SPECIFICATION

Part Number	DNK 355069
Nominal Voltage	3.7 V
Nominal Capacity	1200 mAh
Internal Impedence	<60mΩ
Charge Voltage	4.2V
Recommended Charge Current	0.2 C
Allowed Max Charge Current	0.5 C
Output Voltage Range	4.2 - 2.5 V
Recommended Discharge Current	0.2 C
Max Continuous Discharge Current	1 C
Pulse Discharge Current	3 C (10 mS)
Discharge Cut-off Voltage	2.5± 0.05V
Cycle Life to 80% Health	500 (0.2C, 25°C)

1

ENVIRONMENTAL SPECIFICATIONS

Charging Temperature Range	0 - 45°C
Discharging Temperature Range	-20 - 60°C
Storage Period 1 Week	-20 - 45°C
Storage Period 1 Month	-10 - 45°C
Storage Period 6 Months	0 - 35°C

BATTERY PROTECTION

Over Charge	4.275 ± 50mV
Over Discharge	2.5V ± 50mV
Over Current	3A to 5A
Short Circuit	Yes

MECHANICAL SPECIFICATIONS

Dimensions	71x 50 x 3 mm(L*W*T)
Weight	Around 20 g
Battery Terminals	WC/ FL *

CERTIFICATION

Certification Approval	PLEASE CONSULT SALES

* WC=With Connector FL=Flying Leads UWP=Blue Wrapped PVC BWP=Black Wrapped PVC BC= Bare Cell

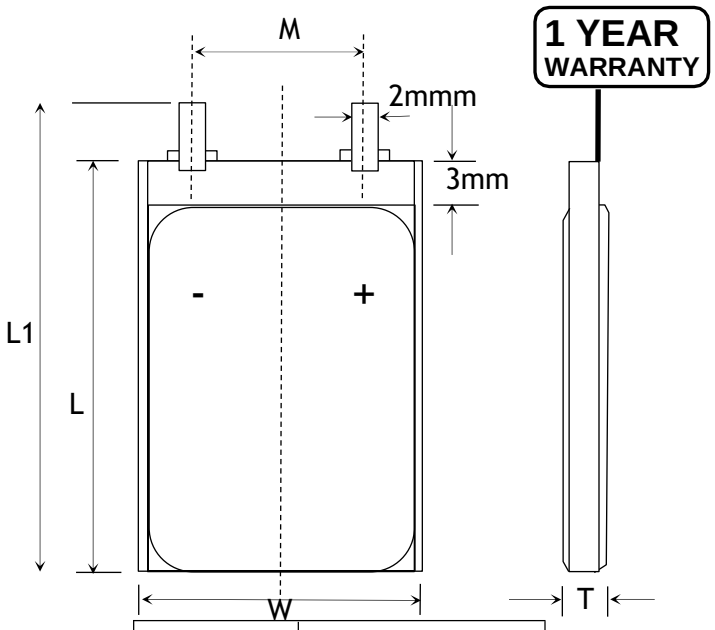

Item	Parameter (mm)
T	3
W	50
M	10
L	69
L_1	71
BL	71 ± 1
CL	100

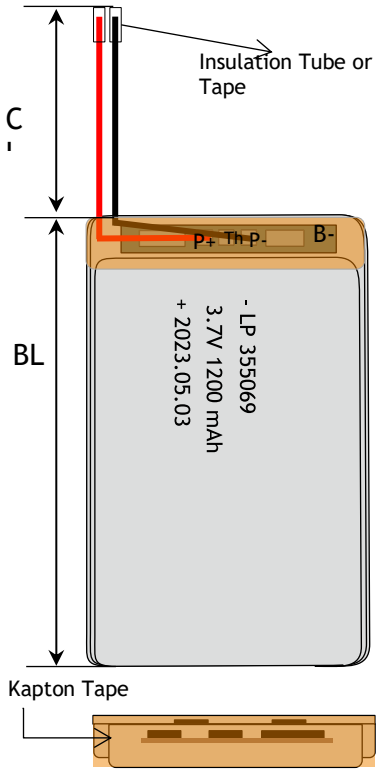

RELATIVE CURVES

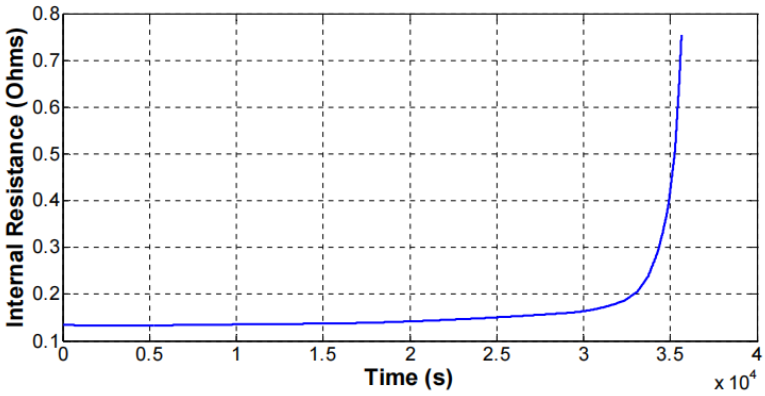

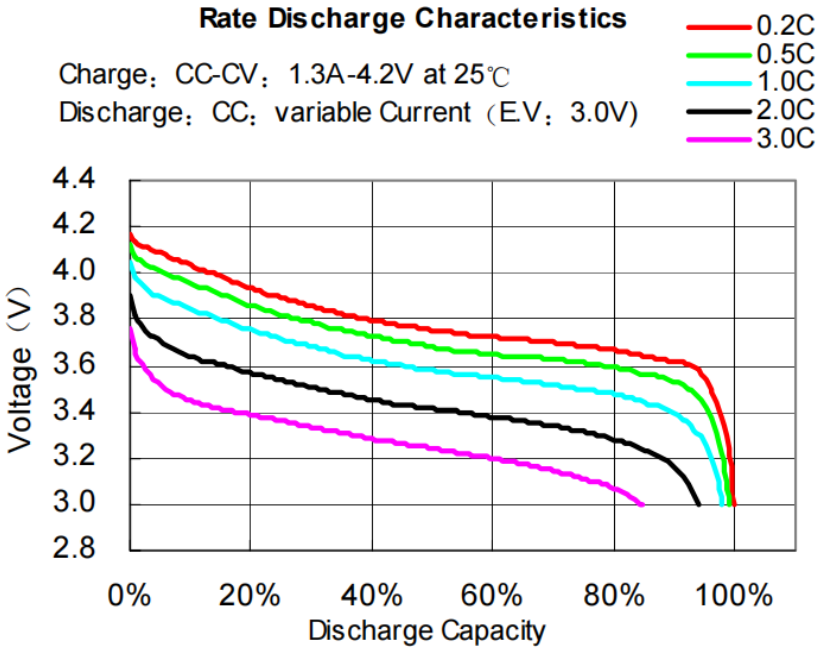

ANNOUNCEMENT

- If you have dropped or damageda LiPo battery in anyway, do not attempt to charge it.
- If at anytime you notice a cell "puff up", disconnect it immediately and cover it with a fire blanket, or put it in a non-conductive container and place it outside away from all flammable objects for at least 30 minutes as chemical reactions can take this long before a fire starts.
- Observe the polarities (Negative and Positive). Do not connect them wrongly.
- Before starting work, if you are designing wearables using lithium-ion batteries, make sure they are easily removeable if they start to react while being worn.
- Never overcharge Batteries beyond the capacity listed on Batteries labels.
- Do not place the battery near flammable materials.
- Do not throw the battery in a fire.
- Double check that the setting for the lithium polymer charger is correct for the pack being charged – this includes the cell count as well as the current settings.
- Insulate all battery terminals on batteries to be disposed of.
- Do not place the battery in a microwave or other heating device.
- ALWAYS use the charging cord supplied with the device (or only use a replacement charging cord that is specified by the device manufacturer to bean approved alternative).