3.7V Lithium Polymer Battery Data Sheet

Model: 355067

Please Find More:

https://www.fpbattery.com/1200mah-lipo-battery/

File Number: A/FP5067-9314

File Version: 01

CONTACT

CUSTOMER SERVICE
86.755.3682.7358
sales@fpbattery.com
Hours of Operation:
9:00am-6:00pm CST, Monday to Friday

LEARN MORE ON:
https://www.fpbattery.com/

DNK POWER COMPANY LIMITED

BATTERY SPECIFICATION

Part Number	DNK 355067
Nominal Voltage	3.7 V
Nominal Capacity	1200 mAh
Internal Impedence	<60mΩ
Charge Voltage	4.2V
Recommended Charge Current	0.2 C
Allowed Max Charge Current	0.5 C
Output Voltage Range	4.2 - 2.5 V
Recommended Discharge Current	0.2 C
Max Continuous Discharge Current	1 C
Pulse Discharge Current	3 C (10 mS)
Discharge Cut-off Voltage	2.5± 0.05V
Cycle Life to 80% Health	500 (0.2C, 25°C)

1

ENVIRONMENTAL SPECIFICATIONS

Charging Temperature Range	0 - 45°C
Discharging Temperature Range	-20 - 60°C
Storage Period 1 Week	-20 - 45°C
Storage Period 1 Month	-10 - 45°C
Storage Period 6 Months	0 - 35°C

BATTERY PROTECTION

Over Charge	4.275 ± 50mV
Over Discharge	2.5V ± 50mV
Over Current	3A to 5A
Short Circuit	Yes

MECHANICAL SPECIFICATIONS

Dimensions	69x 50 x 3 mm(L*W*T)
Weight	Around 20 g
Battery Terminals	WC/ FL *

CERTIFICATION

Certification Approval	PLEASE CONSULT SALES

* WC=With Connector FL=Flying Leads UWP=Blue Wrapped PVC BWP=Black Wrapped PVC BC= Bare Cell

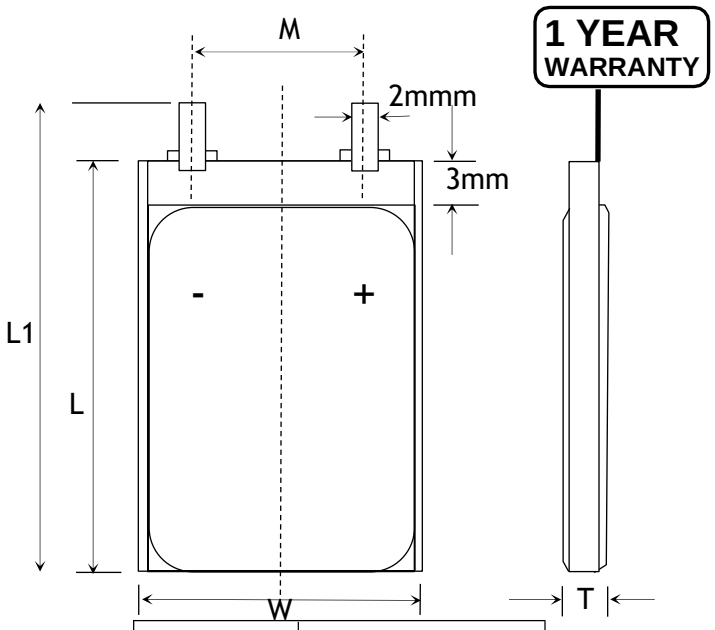

Item	Parameter (mm)
T	3
W	50
M	10
L	67
L_1	69
BL	69 ± 1
CL	100

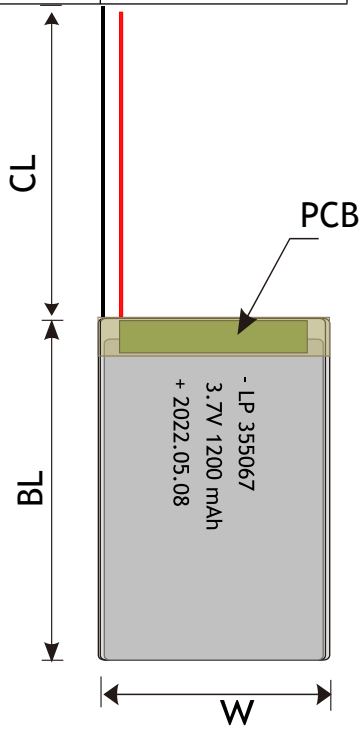

RELATIVE CURVES

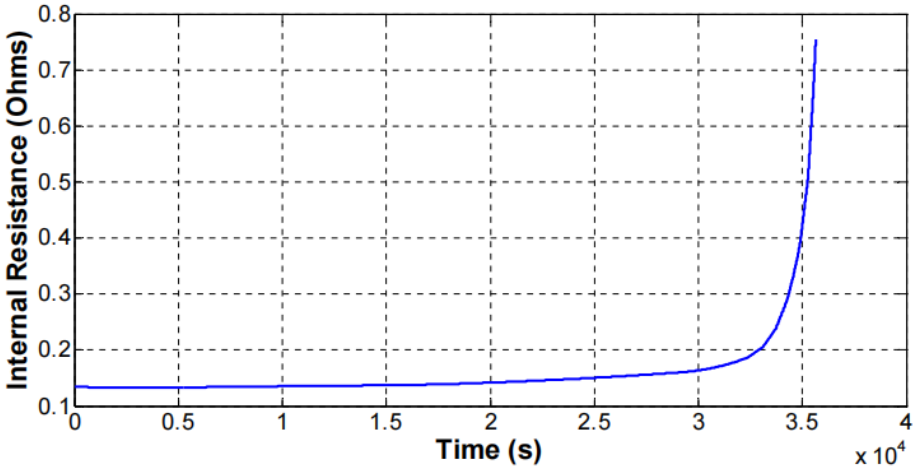

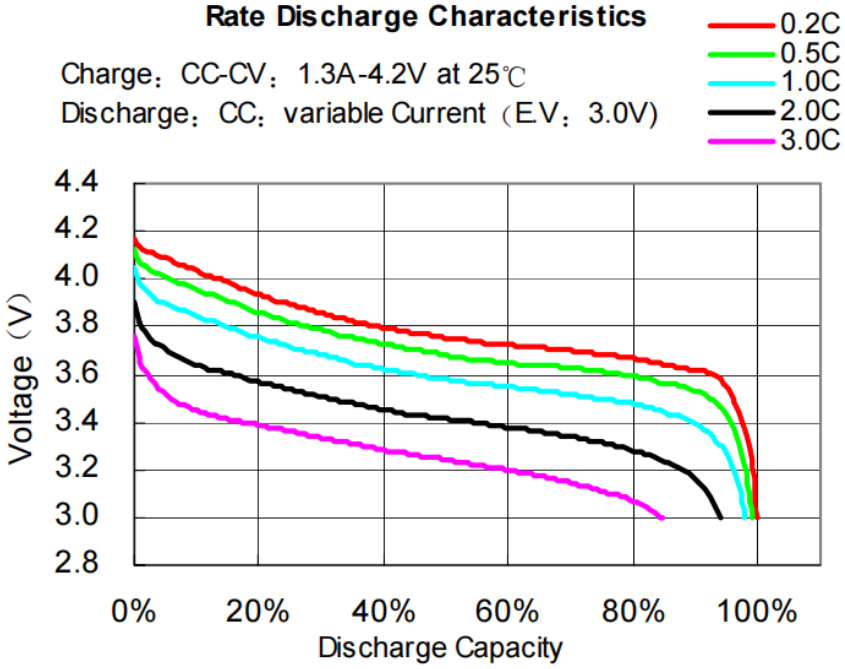

ANNOUNCEMENT

- Avoid tightening the voltage adjustment knob on the way to use the battery.
- ALWAYS activate the building fire alarm system and call 9-1-1 to notify the fire department.
- ALWAYS use the "Balance Charge" setting on your charger. If your charger does not have this feature then don't use it and invest in one that does.
- Avoid placing the battery near sources of ignition.
- Keep Lipo batteries away from heal! And direct sunlight, and do not Store ma car during hot weather. Never use a Lipo that is leaking or gives off a strong odor, or has been damaged many way.
- NEVER put Li-Ion or LiPo batteries in the trash.
- l When charging LiPo batteries, they must be charged at the voltage of the number of cells in series. Example: A 5s4p pack must be charged as a 5 cell pack.
- Store and transport in a non-flammable container
- Use high quality battery connectors. Using connectors that do not fit tightly into the battery socket may result in overheating and melting of the battery case. Remove the connectors from the battery after EVERY use and during storage. Failure to do so will result in plug fatigue resulting in a bad connection and possible case melting. Replace connectors frequently to preserve good connections.
- Be aware that many of the more expensive LiPo chargers will automatically detect the cell count of the battery being charged; cheaper chargers will require a manual setting.

- Avoid excessively hot and humid conditions, especially when batteries are fully charged. Do not place batteries in direct sunlight, on hot surfaces or in hot locations.