3.7V Lithium Polymer Battery Data Sheet

Model: 355066

Please Find More:

https://www.fpbattery.com/1200mah-lipo-battery/

File Number: A/FP5066-8883

File Version: 01

CONTACT

CUSTOMER SERVICE
86.755.3682.7358
sales@fpbattery.com
Hours of Operation:
9:00am-6:00pm CST, Monday to Friday

LEARN MORE ON:
https://www.fpbattery.com/

DNK POWER COMPANY LIMITED

BATTERY SPECIFICATION

Part Number	DNK 355066
Nominal Voltage	3.7 V
Nominal Capacity	1200 mAh
Internal Impedence	<60mΩ
Charge Voltage	4.2V
Recommended Charge Current	0.2 C
Allowed Max Charge Current	0.5 C
Output Voltage Range	4.2 - 2.5 V
Recommended Discharge Current	0.2 C
Max Continuous Discharge Current	1 C
Pulse Discharge Current	3 C (10 mS)
Discharge Cut-off Voltage	2.5± 0.05V
Cycle Life to 80% Health	500 (0.2C, 25°C)

1

ENVIRONMENTAL SPECIFICATIONS

Charging Temperature Range	0 - 45°C
Discharging Temperature Range	-20 - 60°C
Storage Period 1 Week	-20 - 45°C
Storage Period 1 Month	-10 - 45°C
Storage Period 6 Months	0 - 35°C

BATTERY PROTECTION

Over Charge	4.275 ± 50mV
Over Discharge	2.5V ± 50mV
Over Current	3A to 5A
Short Circuit	Yes

MECHANICAL SPECIFICATIONS

Dimensions	68x 50 x 3 mm(L*W*T)
Weight	Around 20 g
Battery Terminals	WC/ FL *

CERTIFICATION

Certification Approval	PLEASE CONSULT SALES

* WC=With Connector FL=Flying Leads UWP=Blue Wrapped PVC BWP=Black Wrapped PVC BC= Bare Cell

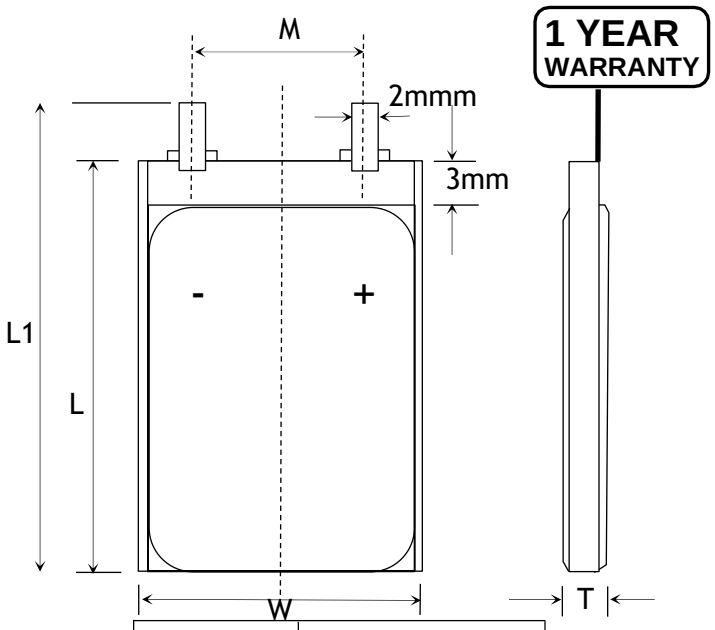

Item	Parameter (mm)
T	3
W	50
M	10
L	66
L_1	68
BL	68 ± 1
CL	100

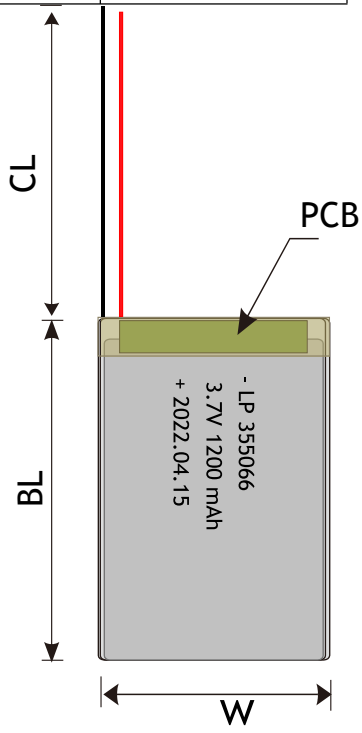

RELATIVE CURVES

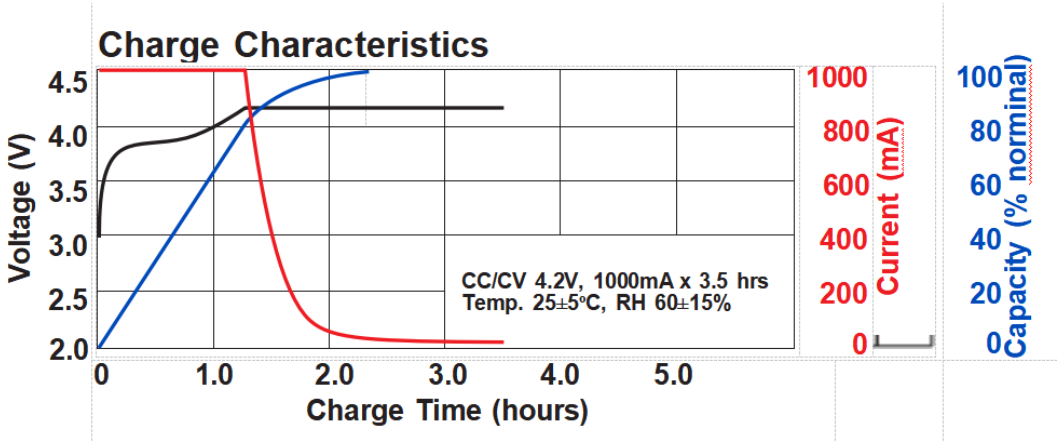

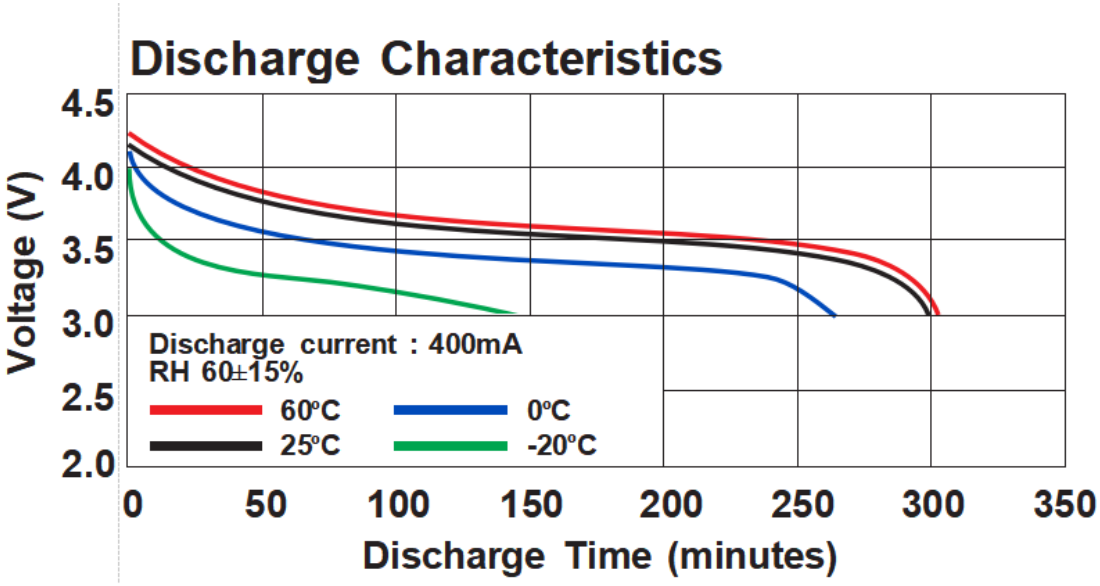

ANNOUNCEMENT

- Always use a balancer board to charge LiPo Battery with more than 1 cell.
- Do not allow a Lipo battery to get wet
- Do not crush or bend the battery.
- Do not plug and unplug the charger while using the battery.
- Never charge Batteries inside of the model.
- Do not reverse the polarity.
- All batteries should be stored, charged and used in accordance with the manufacturer’s instructions.
- Connecting the LiPo Battery to the Charger (Read the Charger Instructions)
- Do not expose the battery to temperature extremes, such as high or low temperatures.
- Over-charging LiPo batteries will damage them and possibly cause a fire. (above 4.20V per cell is considered overcharged).
- Do not charge the battery in a closed container.